AGENDA

REGULAR MEETING OF THE
CITY OF KING CITY COUNCIL
AND
Sitting as SUCCESSOR AGENCY OF
THE RDA FOR THE CITY OF KING

TUESDAY JANUARY 14, 2020
6:00 P.M.

CITY HALL
212 S. VANDERHURST AVENUE
KING CITY, CALIFORNIA 93930

Spanish interpretation services will be available at meeting

In compliance with the Americans with Disabilities Act, if you need special assistance to participate in a City meeting, Please contact the City Clerk's Office (831-386-5925) at least 48 hours prior to the Meeting to ensure that reasonable arrangements can be made to provide accessibility to the meeting.

** Please submit all correspondence for City Council PRIOR to the meeting with a copy to the City Clerk.*

1. CALL TO ORDER

2. ROLL CALL: Council Members Darlene Acosta, Robert Cullen, Carlos DeLeon, Mayor Pro Tem Carlos Victoria, and Mayor Mike LeBarre

3. FLAG SALUTE

4. CLOSED SESSION ANNOUNCEMENTS

5. SPECIAL PRESENTATIONS

A. King City Police Department Awards – Chief Masterson

B. San Antonio and Nacimiento Reservoirs Deferred Maintenance Proposition 218, Brent Buche, General Manager, Fabricio Chombo, Finance Manager and Kari Wagner, Consultant, Monterey County Water Resources Agency

6. PUBLIC COMMENT

Any member of the public may address the Council for a period not to exceed *three minutes'* total on any item of interest within the jurisdiction of this Council that is not on the agenda. The Council will listen to all communications; however, in compliance with the Brown Act, the Council cannot act on items not on the agenda. Comments should be directed to the Council as a whole and not to any individual Council Member. Slanderous, profane or personal remarks against any Council Member, staff member or member of the audience is not permitted.

7. COUNCIL COMMUNICATIONS & COMMITTEE REPORTS

Individual Council Members may comment on Council business, his or her Council activities, City operations, projects or other items of community interest. Council Members may also request staff to report back at a subsequent meeting on any matter or take action to direct staff to prepare a staff report for a future agenda.

8. STAFF COMMUNICATIONS

Comments presented by the City Manager, City Attorney or other staff on City business and/or announcements.

9. CONSENT AGENDA

The following items listed below are scheduled for consideration as a group. The recommendations for each item are noted. Members of the audience may speak on any item(s) listed on the Consent Agenda. Any Council Member, the City Manager, or the City Attorney may request that an item be withdrawn from the Consent Agenda to allow for full discussion. The Council may approve the remainder of the Consent Agenda on one motion. Items withdrawn from the Consent Agenda may be considered by separate motions at the conclusion of the discussion of each item.

A. Meeting Minutes of December 10, 2019 Council Meeting
Recommendation: approve and file.

B. City of King December 1 thru December 31, 2019 Check Register
Recommendation: receive and file.

C. City of King Successor Agency December 2019 Check Register
Recommendation: receive and file.

D. Consideration: Appropriation for Fire Safety Clothing
Recommendation: appropriate $20,000 for fire safety clothing.

E. Consideration: Amendment to Master Fee Schedule
Recommendation: adopt a Resolution amending the Master Fee Schedule to increase certain aquatics center fees and establish a new Cannabis Conditional Operations Permit Issuance and Renewal Fee.

F. Consideration: A Resolution of the Successor Agency to the Former King City Community Development Agency Approving the Recognized Obligation Payment Schedule 20-21 for the Period of July 1, 2020 through June 30, 2021
Recommendation: approve Resolution SA-2020-01 approving the ROPS 20-21, for the period of July 1, 2020 through June 30, 2021.

G. Consideration: Update to FY 2019-20 Job Classification Plan
Recommendation: adopt a Resolution approving an update to the FY 2019-20 Job Classification Plan to implement changes to hourly pay rates for some of the City's part-time positions.

10. PUBLIC HEARINGS

A. Consideration: An Ordinance of the City Council of the City of King Amending Chapters 17.04, 17.12, 17.14, 17.16, 17.18, of Title 17 of the King City Municipal Code Pertaining to Fences, Walls and Hedges
Recommendation: open the public hearing, consider public testimony, introduce and conduct the first reading of An Ordinance of the City Council of the City of King Amending Chapters 17.04, 17.12, 17.14, 17.16, 17.18, of Title 17 of the King City Municipal Code pertaining to fences, walls and hedges, by title only, and set the second reading and adoption for the next regularly scheduled Council meeting of January 28, 2020.

B. Consideration: An Ordinance of the City Council of the City of King Amending Title 17, Chapter 17.26, Section 17.26.050 of the King City Municipal Code Allowing Four (4) Stories and Fifty (50') Feet for Hotels and Motels in the Highway Service District, Amending Chapter 17.48 Section 17.48.070 and Chapter 17.04 Section 17.04.240 to Consolidate Height Exceptions and Building Height Definition, and Amending Chapter 17.04, Sections 17.04.260 and 17.04.350 to Consolidate Hotel/Motel Definitions
Recommendation: open the public hearing, consider public testimony, introduce and conduct the first reading of an Ordinance amending Title 17, Chapter 17.26, Section 17.26.050 of the King City Municipal Code allowing four (4) stories and fifty (50') feet for hotels and motels in the highway service district, amending chapter 17.48 section 17.48.070 and chapter 17.04 section 17.04.240 to consolidate height exceptions and building height definition, and amending chapter 17.04, sections 17.04.260 and 17.04.350 to consolidate hotel/motel definitions, by title only, and set the second reading and adoption for the next regularly scheduled Council meeting of January 28, 2020.

C. Consideration: An Ordinance of the City Council of the City of King Amending Municipal Code Title 7, Chapter 17.04, and Amending the Historic Corridor Revitalization Plan to Add Definition for "Drinking Establishment" and Remove Redundant Definitions.
Recommendation: open the public hearing, consider public testimony, introduce and conduct the first reading of an Ordinance amending Municipal Code Title 7, Chapter 17.04, and amending the historic corridor revitalization plan to add definition for "drinking establishment" and remove redundant definitions, by title only, and set the second reading and adoption for the next regularly scheduled Council meeting of January 28, 2020.

D. Consideration: An Ordinance of the City Council of the City of King Amending Title 7, Chapter 7.51 and Title 13, Chapter 13.08, of the King City Municipal Code to Extend Prohibition of Discharge of Offensive Substances to Private Property and to Include Yard Debris as on Offensive Substance.
Recommendation: open the public hearing, consider public testimony, introduce and conduct the first reading of an Ordinance amending Title 7, Chapter 7.51 and Title 13, Chapter 13.08, of the King City Municipal Code to extend prohibition of discharge of offensive substances to private property and to include yard debris as on offensive substance, by title only, and set the second reading and adoption for the next regularly scheduled Council meeting of January 28, 2020.

E. Consideration: An Ordinance of the City Council of the City of King Amending Sections 17.48.060, 17.04.450 and 17.16.040 of Title 17, of the King City Municipal Code to Remove Language Related to Signs Where it Exists Outside Chapter 17.55 Signs.
Recommendation: open the public hearing, consider public testimony, introduce and conduct the first reading of an Ordinance amending Sections 17.48.060, 17.04.450 and 17.16.040 of Title 17, of the King City Municipal Code to remove language related to signs where it exists outside chapter

17.55 signs, by title only, and set the second reading and adoption for the next regularly scheduled Council meeting of January 28, 2020.

11. REGULAR BUSINESS

None

12. CITY COUNCIL CLOSED SESSION

Announcement(s) of any reportable action(s) taken in Closed Session will be made in open session and repeated at the beginning of the next Regular City Council meeting as this portion of the meeting is not recorded.

1. Government Code Section 54956.95
   LIABILITY CLAIMS
   Claimant: Richard Robles
   Agency Claimed Against: King City Police Department

13. ADJOURNMENT

City Council Meeting
December 10, 2019

1. CALL TO ORDER:

Regular Meeting called to order at 6:00pm by Mayor Pro Tem Victoria.

2. FLAG SALUTE:

The flag salute was led by Council member Acosta.

3. ROLL CALL:

City Manager Adams conducted roll call.

City Council: Darlene Acosta, Carlos DeLeon, Mayor Pro Tem Carlos Victoria.

Council member Mike LeBarre, and Rob Cullen are absent attending a conference.

City Staff: City Manager Steven Adams; City Attorney Roy Santos; Executive Admin. Asst./Deputy City Clerk, Erica Sonne.

4. CLOSED SESSION ANNOUNCEMENTS:
None

5. PRESENTATIONS:

None

6. PUBLIC COMMUNICATIONS:
None

7. COUNCIL COMMUNICATIONS:

Council Member Acosta stated nothing to report.

Council Member DeLeon stated nothing to report.

Mayor Pro Tem Victoria stated nothing to report.

8. CITY STAFF REPORTS AND COMMENTS:

City Manager Steven Adams stated nothing to report.

City Attorney Roy Santos stated nothing to report, Happy Holidays and see you in the New Year.

9. CONSENT AGENDA

A. Meeting Minutes of November 26, 2019 Council Meeting
B. City of King Check Register October 12 thru November 30, 2019
C. City of King Successor Agency Check Register November 18, 2019

D. Consideration: King City Community Power Renewable Energy Purchase
E. Consideration: Rescoping of Services by Kimley-Horn for Design Services of Proposed Roundabout and Authorize the Environmental Documents to be Prepared by Earth Design Inc.

F. Consideration: Mustang Court Subdivision Final Tract Map Conformance and Acceptance of Easements
G. Consideration: Award of Contract for the Creek Bridge Soccer Field Sod Installation Project
H. Consideration: City of King FY 2017-2018 AB 1600 Annual Impact Fee Report
I. Consideration: Mesa Del Rey Airport Ground Lease with Rava Business Park, Inc.
J. Consideration: Consultant Services Agreement for Downtown Plaza Design

Karen Jernigan spoke on Item I in favor of the lease for Rava. She wishes this would have happened a few years ago. It gives one more significant historic element for the City.

She also spoke on Item J and the Downtown Plaza project and it moving in a good direction.

Action: Motion to approve consent agenda items A-J by Acosta and seconded by DeLeon.

AYES: Council Members: Acosta, DeLeon and Victoria
NOES: Council Members:
ABSENT: Council Members: LeBarre, Cullen
ABSTAIN: Council Members:

10. PUBLIC HEARINGS:
None

11. REGULAR BUSINESS:

A. Consideration: Park Naming Agreement for Creek Bridge Soccer Park

City Manager Adams introduced this item.
Andrea Wasson, Recreation Coordinator further introduced this item.

Action: 1) approve by motion the termination of the agreement with the South County YMCA to provide Spring and Fall Youth Soccer programs in King City; and 2) direct staff to resume the City sponsored Youth Soccer program beginning in spring 2020 by DeLeon and seconded by Acosta.

AYES: Council Members: Acosta, DeLeon and Victoria
NOES: Council Members:
ABSENT: Council Members: LeBarre, Cullen
ABSTAIN: Council Members:

12. CITY COUNCIL CLOSED SESSION
None

ADJOURNMENT:

Mayor Pro Tem Victoria adjourned the meeting by motion from DeLeon and second by Acosta 6:11p.m.

Approved Signatures:

Mayor, Michael LeBarre **City of King**	**City Clerk, Steven Adams** **City of King**

KING CITY
CALIFORNIA

Item No. 9(B)

REPORT TO THE CITY COUNCIL

DATE: **JANUARY 14, 2020**

TO: **HONORABLE MAYOR AND MEMBERS OF THE CITY COUNCIL**

FROM: **MIKE HOWARD, FINANCE DIRECTOR**

RE: **CONSIDERATION OF CITY OF KING CHECK REGISTER DECEMBER 1 THRU DECEMBER 31, 2019**

RECOMMENDATION:

It is recommended City Council receive and file.

BACKGROUND:

At least once a month, the City Treasurer shall submit to the City Council, a copy of the invoices paid for the previous month.

DISCUSSION:

The purpose of this item is to provide the Council an opportunity to review and monitor ongoing expenditures. These documents are attached.

COST ANALYSIS:

There is no fiscal impact as a result of this action.

ENVIRONMENTAL REVIEW:

No Environmental Review required for this item.

ALTERNATIVES:

The following alternatives are provided for Council consideration:

1. Receive and file the report; or
2. Provide other direction to staff regarding requests for additional information.

Exhibits:
1. Check Register Report

Submitted by: _____
Mike Howard, Finance Director

Approved by: _____
Steven Adams, City Manager

Check Register Report

DECEMBER 2019

Date: 01/08/2020
Time: 11:17 am
Page: 1

ING CITY CITY HALL

BANK: WELLS FARGO BANK

Check Number	Check Date / Void/Stop Date	Vendor# / Status	Vendor Name / Check Description	Gross / Discount	Amount
63094	12/16/2019	2NDNALLC	2ND NATURE LLC	3,870.00	3,870.00
		Printed	Reginal Board - Trash Program	0.00	

Ref#	GL Number	Gross	Discount	Amount
77759	18-412-538.000	3,870.00	0.00	3,870.00
			Check Amount	3,870.00

63095	12/16/2019	A T T	A T & T	80.25	80.25
		Printed	Internet - #139650003	0.00	

Ref#	GL Number	Gross	Discount	Amount
77734	10-161-541.103	80.25	0.00	80.25
			Check Amount	80.25

63096	12/16/2019	AT&T-GA	A T & T	8.53	8.53
		Printed	Telephone - Long Distance.	0.00	

Ref#	GL Number	Gross	Discount	Amount
77895	10-321-541.103	8.53	0.00	8.53
			Check Amount	8.53

63097	12/16/2019	ADAMS	ADAMS ASHBY GROUP, LLC	840.00	840.00
		Printed	CDBG Administration	0.00	

Ref#	GL Number	Gross	Discount	Amount
77765	59-000-538.101	840.00	0.00	840.00
			Check Amount	840.00

63098	12/16/2019	ADAMSS	STEVEN ADAMS	56.26	56.26
		Printed	Mileage - Salinas	0.00	

Ref#	GL Number	Gross	Discount	Amount
77750	10-121-551.000	56.26	0.00	56.26
			Check Amount	56.26

63099	12/16/2019			0.00	0.00
	12/16/2019	Void	Void Check	0.00	

Ref#	GL Number	Gross	Discount	Amount
			Check Amount	0.00

63100	12/16/2019	KCTVHARD	ALCANTAR HARDWARE INC	1,783.54	1,783.54
		Printed	Evidence Lab Trash Can.	0.00	

Ref#	GL Number	Gross	Discount	Amount
77768	10-425-522.118	208.77	0.00	208.77
77769	22-423-543.000	15.86	0.00	15.86
77770	22-423-522.000	15.84	0.00	15.84
77771	22-423-522.000	13.54	0.00	13.54
77772	22-423-543.000	22.64	0.00	22.64
77773	22-423-522.118	652.49	0.00	652.49
77774	22-423-522.118	11.26	0.00	11.26
77775	22-423-522.118	19.56	0.00	19.56
77776	10-161-522.000	20.65	0.00	20.65
77777	10-161-522.000	4.99	0.00	4.99
77778	10-161-522.000	21.74	0.00	21.74
77779	10-161-521.000	10.86	0.00	10.86
77780	10-426-522.102	3.89	0.00	3.89
77781	10-426-522.118	10.83	0.00	10.83

Check Number	Check Date / Void/Stop Date	Vendor# / Status	Vendor Name / Check Description		Gross / Discount	Amount
	77782	10-426-522.118	196.71	0.00	196.71	
	77783	10-426-522.000	142.28	0.00	142.28	
	77784	10-425-522.118	60.42	0.00	60.42	
	77785	10-161-522.000	15.21	0.00	15.21	
	77786	22-424-522.000	195.74	0.00	195.74	
	77787	10-161-522.000	108.74	0.00	108.74	
	77788	10-311-521.000	31.52	0.00	31.52	
				Check Amount	1,783.54	
63101	12/16/2019	A & W	ALESHIRE & WYNDER LLP		7,941.00	7,941.00
		Printed	Legal Services -		0.00	

Ref#	GL Number	Gross	Discount	Amount
77737	10-151-531.000	7,846.00	0.00	7,846.00
77738	15-440-531.000	95.00	0.00	95.00
			Check Amount	7,941.00

63102	12/16/2019	ALVAREZL	ALVAREZ TECHNOLOGY GROUP -		1,430.59	1,430.59
		Printed	Computer Lease		0.00	

Ref#	GL Number	Gross	Discount	Amount
77754	10-264-533.000	1,430.59	0.00	1,430.59
			Check Amount	1,430.59

63103	12/16/2019				0.00	0.00
	12/16/2019	Void	Void Check		0.00	

Ref#	GL Number	Gross	Discount	Amount
			Check Amount	0.00

63104	12/16/2019				0.00	0.00
	12/16/2019	Void	Void Check		0.00	

Ref#	GL Number	Gross	Discount	Amount
			Check Amount	0.00

63105	12/16/2019	HANNA	ASSOCIATED ENGINEERING-SURVEY		21,622.75	21,622.75
		Printed	King City Local Road Safety Pl		0.00	

Ref#	GL Number	Gross	Discount	Amount
77816	22-423-543.214	960.00	0.00	960.00
77817	10-221-532.000	320.00	0.00	320.00
77818	10-000-204.335	160.00	0.00	160.00
77819	10-000-204.335	160.00	0.00	160.00
77820	18-412-532.000	1,624.00	0.00	1,624.00
77820	10-221-533.000	3,016.00	0.00	3,016.00
77821	18-412-532.000	616.00	0.00	616.00
77821	10-221-533.000	1,144.00	0.00	1,144.00
77822	18-412-532.000	224.00	0.00	224.00
77822	10-221-533.000	416.00	0.00	416.00
77823	18-412-532.000	112.00	0.00	112.00
77823	10-221-533.000	208.00	0.00	208.00
77824	18-412-532.000	2,560.00	0.00	2,560.00
77825	18-412-532.000	320.00	0.00	320.00
77826	15-440-532.000	240.00	0.00	240.00
77827	18-412-532.000	800.00	0.00	800.00
77828	18-412-532.000	160.00	0.00	160.00
77829	22-423-532.000	524.75	0.00	524.75
77830	22-423-532.000	160.00	0.00	160.00

Check Number	Check Date / Void/Stop Date	Vendor# / Status	Vendor Name / Check Description			Gross / Discount	Amount
	77831	10-221-533.000		320.00	0.00	320.00	
	77832	10-221-533.000		1,760.00	0.00	1,760.00	
	77833	10-221-533.000		2,560.00	0.00	2,560.00	
	77834	10-221-532.000		800.00	0.00	800.00	
	77835	10-221-533.000		858.00	0.00	858.00	
	77836	10-000-204.852		960.00	0.00	960.00	
	77837	60-000-532.000		480.00	0.00	480.00	
	77838	26-000-532.000		160.00	0.00	160.00	
					Check Amount	21,622.75	
63106	12/16/2019	AT & T	AT & T			261.98	261.98
		Printed	Telephone -			0.00	
	Ref#	GL Number		Gross	Discount	Amount	
	77736	10-161-541.103		261.98	0.00	261.98	
					Check Amount	261.98	
63107	12/16/2019	AT&T - C	AT&T			21.48	21.48
		Printed	KCPD Line - #9391048339			0.00	
	Ref#	GL Number		Gross	Discount	Amount	
	77767	10-311-536.301		21.48	0.00	21.48	
					Check Amount	21.48	
63108	12/16/2019	AT&T - C	AT&T			21.19	21.19
		Printed	911 Line - #9391036550			0.00	
	Ref#	GL Number		Gross	Discount	Amount	
	77766	10-311-536.301		21.19	0.00	21.19	
					Check Amount	21.19	
63109	12/16/2019	CARMEL FIR	ART BLACK			3,750.00	3,750.00
		Printed	Annual Business License			0.00	
	Ref#	GL Number		Gross	Discount	Amount	
	77739	10-231-533.000		250.00	0.00	250.00	
	77740	10-231-533.000		250.00	0.00	250.00	
	77741	10-231-533.000		250.00	0.00	250.00	
	77742	10-231-533.000		250.00	0.00	250.00	
	77743	10-231-533.000		250.00	0.00	250.00	
	77744	10-231-533.000		250.00	0.00	250.00	
	77745	10-231-533.000		250.00	0.00	250.00	
	77746	10-231-533.000		250.00	0.00	250.00	
	77763	10-231-533.000		1,750.00	0.00	1,750.00	
					Check Amount	3,750.00	
63110	12/16/2019	BOYDK	KEITH BOYD			52.79	52.79
		Printed	Reimbursement for Computer			0.00	
	Ref#	GL Number		Gross	Discount	Amount	
	77789	10-264-574.500		52.79	0.00	52.79	
					Check Amount	52.79	
63111	12/16/2019	CASEY PRIN	CASEY PRINTING, INC.			352.35	352.35
		Printed	Temporary No-Parking			0.00	
	Ref#	GL Number		Gross	Discount	Amount	
	77790	22-423-522.122		352.35	0.00	352.35	
					Check Amount	352.35	

Check Number	Check Date / Void/Stop Date	Vendor# / Status	Vendor Name / Check Description	Gross / Discount	Amount
63112	12/16/2019	COASTAL	COASTAL TRACTOR	20.34	20.34
		Printed	Cap Filler for Case Tractor.	0.00	

Ref#	GL Number	Gross	Discount	Amount
77792	18-412-522.118	20.34	0.00	20.34
			Check Amount	20.34

63113	12/16/2019	COASTL	COASTLINE MARKETING GROUP INC	125.00	125.00
		Printed	Website Maint.	0.00	

Ref#	GL Number	Gross	Discount	Amount
77893	10-264-543.202	125.00	0.00	125.00
			Check Amount	125.00

63114	12/16/2019	CORTEZG	GERARDO CORTEZ	500.00	500.00
		Printed	Rec Center Rental	0.00	

Ref#	GL Number	Gross	Discount	Amount
77755	71-000-204.103	500.00	0.00	500.00
			Check Amount	500.00

63115	12/16/2019	COFM-PRO	COUNTY OF MONTEREY	10,389.35	10,389.35
		Printed	On Campus Probation Officer	0.00	

Ref#	GL Number	Gross	Discount	Amount
77843	10-264-533.000	10,389.35	0.00	10,389.35
			Check Amount	10,389.35

63116	12/16/2019	COOFTULARE	COUNTY OF TULARE -	8,446.76	8,446.76
		Printed	Radio Communication Service.	0.00	

Ref#	GL Number	Gross	Discount	Amount
77791	10-311-522.110	8,446.76	0.00	8,446.76
			Check Amount	8,446.76

63117	12/16/2019	DAVE'S REP	DAVE'S REPAIR SERVICE	85.00	85.00
		Printed	Fuel Pump Inspection-	0.00	

Ref#	GL Number	Gross	Discount	Amount
77793	15-440-543.200	85.00	0.00	85.00
			Check Amount	85.00

63118	12/16/2019	DEPT ACCNT	DEPARTMENT OF JUSTICE	172.00	172.00
		Printed	Fingerprints	0.00	

Ref#	GL Number	Gross	Discount	Amount
77872	10-264-558.311	172.00	0.00	172.00
			Check Amount	172.00

63119	12/16/2019			0.00	0.00
	12/16/2019	Void	Void Check	0.00	

Ref#	GL Number	Gross	Discount	Amount
			Check Amount	0.00

63120	12/16/2019	EARTH DESI	EARTH DESIGN, INC.	22,126.78	22,126.78
		Printed	SB2 Planning Land Use	0.00	

Ref#	GL Number	Gross	Discount	Amount

Check Number	Check Date / Void/Stop Date	Vendor# / Status	Vendor Name / Check Description	Gross / Discount	Amount
	77795	10-241-533.000	13,926.73	0.00	13,926.73
	77796	10-241-533.000	946.56	0.00	946.56
	77797	10-000-204.328	272.66	0.00	272.66
	77798	10-000-204.333	132.61	0.00	132.61
	77799	10-000-204.334	198.92	0.00	198.92
	77800	10-000-204.805	397.83	0.00	397.83
	77801	10-000-204.807	198.92	0.00	198.92
	77802	10-000-204.807	132.61	0.00	132.61
	77803	10-000-204.811	232.07	0.00	232.07
	77804	10-000-204.848	464.14	0.00	464.14
	77805	10-000-204.849	563.59	0.00	563.59
	77806	10-000-204.852	272.66	0.00	272.66
	77807	10-000-204.853	3,913.40	0.00	3,913.40
	77808	67-000-533.000	474.08	0.00	474.08
				Check Amount	22,126.78
63121	12/16/2019	EDTRAIN	EDUCATION & TRAINING SERVICES	499.00	499.00
		Printed	Leadership Training program fo	0.00	

Ref#	GL Number	Gross	Discount	Amount
77794	18-412-553.000	499.00	0.00	499.00
			Check Amount	499.00

63122	12/16/2019	FED EXP	FEDEX	35.64	35.64
		Printed	Postage - #8515-1933-5	0.00	

Ref#	GL Number	Gross	Discount	Amount
77809	10-121-521.101	35.64	0.00	35.64
			Check Amount	35.64

63123	12/16/2019	FIRSTTA	FIRST TACTICAL LLC	469.40	469.40
		Printed	City Hall Staff Work Shirts.	0.00	

Ref#	GL Number	Gross	Discount	Amount
77811	10-161-522.000	469.40	0.00	469.40
			Check Amount	469.40

63124	12/16/2019	HARDEE	FRED HARDEE	750.00	750.00
		Printed	Investigation Bernal.	0.00	

Ref#	GL Number	Gross	Discount	Amount
77839	10-311-558.312	750.00	0.00	750.00
			Check Amount	750.00

63125	12/16/2019	GIS	GONZALES IRRIGATION SYSTEMS,	312.64	312.64
		Printed	Supply for Tank @	0.00	

Ref#	GL Number	Gross	Discount	Amount
77814	10-426-522.129	202.55	0.00	202.55
77815	10-630-543.000	110.09	0.00	110.09
			Check Amount	312.64

63126	12/16/2019	FASHION	YSAURO GONZALES	92.60	92.60
		Printed	Animal Control - Blankets	0.00	

Ref#	GL Number	Gross	Discount	Amount
77810	10-311-538.304	92.60	0.00	92.60
			Check Amount	92.60

Check Number	Check Date / Void/Stop Date	Vendor# / Status	Vendor Name / Check Description	Gross / Discount	Amount
63127	12/16/2019	GREEN L	GREEN LINE	2,250.00	2,250.00
		Printed	Clean Out Sewer Line-	0.00	

Ref#	GL Number	Gross	Discount	Amount
77812	18-412-522.000	1,350.00	0.00	1,350.00
77813	18-412-533.000	900.00	0.00	900.00
			Check Amount	2,250.00

Check Number	Check Date / Void/Stop Date	Vendor# / Status	Vendor Name / Check Description	Gross / Discount	Amount
63128	12/16/2019	GREEN'S	GREEN'S ACCOUNTING	13,884.00	13,884.00
		Printed	Finance & Accounting	0.00	

Ref#	GL Number	Gross	Discount	Amount
77891	22-422-534.102	1,382.50	0.00	1,382.50
77891	18-412-534.102	4,147.50	0.00	4,147.50
77891	10-131-534.102	8,295.00	0.00	8,295.00
77891	10-161-521.101	59.00	0.00	59.00
			Check Amount	13,884.00

Check Number	Check Date / Void/Stop Date	Vendor# / Status	Vendor Name / Check Description	Gross / Discount	Amount
63129	12/16/2019	HARBIN	HARBIN CONSTRUCTION	7,751.17	7,751.17
		Printed	Adjusted Door at	0.00	

Ref#	GL Number	Gross	Discount	Amount
77760	41-161-570.200	7,751.17	0.00	7,751.17
			Check Amount	7,751.17

Check Number	Check Date / Void/Stop Date	Vendor# / Status	Vendor Name / Check Description	Gross / Discount	Amount
63130	12/16/2019	GOLDST	HECTOR CHAVEZ	5,800.00	5,800.00
		Printed	Roof Repair	0.00	

Ref#	GL Number	Gross	Discount	Amount
77890	10-311-543.100	5,800.00	0.00	5,800.00
			Check Amount	5,800.00

Check Number	Check Date / Void/Stop Date	Vendor# / Status	Vendor Name / Check Description	Gross / Discount	Amount
63131	12/16/2019	HINDERLITE	HINDERLITER, DELLAMAS & ASSOC	6,646.97	6,646.97
		Printed	Sales Tax Audit -	0.00	

Ref#	GL Number	Gross	Discount	Amount
77894	10-264-538.000	6,646.97	0.00	6,646.97
			Check Amount	6,646.97

Check Number	Check Date / Void/Stop Date	Vendor# / Status	Vendor Name / Check Description	Gross / Discount	Amount
63132	12/16/2019	TIRE KING	JOSE RODRIGUEZ	556.01	556.01
		Printed	Maint on Truck #30	0.00	

Ref#	GL Number	Gross	Discount	Amount
77840	22-423-543.301	556.01	0.00	556.01
			Check Amount	556.01

Check Number	Check Date / Void/Stop Date	Vendor# / Status	Vendor Name / Check Description	Gross / Discount	Amount
63133	12/16/2019	KENEDY	RYAN KENEDY	62.50	62.50
		Printed	Critical Incident Response	0.00	

Ref#	GL Number	Gross	Discount	Amount
77889	10-311-551.000	62.50	0.00	62.50
			Check Amount	62.50

Check Number	Check Date / Void/Stop Date	Vendor# / Status	Vendor Name / Check Description	Gross / Discount	Amount
63134	12/16/2019	KC CHAMBER	KING CITY CHAMBER OF COMMERCE	5,000.00	5,000.00
		Printed	Membership	0.00	

Ref#	GL Number	Gross	Discount	Amount
77841	10-111-535.107	5,000.00	0.00	5,000.00
			Check Amount	5,000.00

Check Number	Check Date / Void/Stop Date	Vendor# / Status	Vendor Name / Check Description	Gross / Discount	Amount
63135	12/16/2019	LA HEARNE	L.A. HEARNE COMPANY	570.00	570.00
		Printed	Seed for Creekbridge	0.00	

Ref#	GL Number	Gross	Discount	Amount
77842	10-426-522.129	570.00	0.00	570.00
			Check Amount	570.00

63136	12/16/2019	XTEL	LS DE LLC	1,016.46	1,016.46
		Printed	Telephone Service	0.00	

Ref#	GL Number	Gross	Discount	Amount
77752	10-161-541.104	86.15	0.00	86.15
77753	10-161-541.103	930.31	0.00	930.31
			Check Amount	1,016.46

63137	12/16/2019	LUX	BRENNAN LUX	62.50	62.50
		Printed	Critical Incident Response	0.00	

Ref#	GL Number	Gross	Discount	Amount
77886	10-311-551.000	62.50	0.00	62.50
			Check Amount	62.50

63138	12/16/2019	MARTELISA	ELISA MARTINEZ	50.00	50.00
		Printed	CA Public Records Act Training	0.00	

Ref#	GL Number	Gross	Discount	Amount
77885	10-311-551.000	50.00	0.00	50.00
			Check Amount	50.00

63139	12/16/2019	CYPRESSW	MILES CLIFFORD FARMER	15,885.20	15,885.20
		Printed	Waste Water Treatment	0.00	

Ref#	GL Number	Gross	Discount	Amount
77844	18-412-533.000	15,885.20	0.00	15,885.20
			Check Amount	15,885.20

63140	12/16/2019	NEWSV	NEW SV MEDIA, INC	253.00	253.00
		Printed	Found Property Listing	0.00	

Ref#	GL Number	Gross	Discount	Amount
77845	10-426-522.000	100.00	0.00	100.00
77846	10-311-554.000	153.00	0.00	153.00
			Check Amount	253.00

63141	12/16/2019	O'REILLY A	O'REILLY AUTOMOTIVE, INC.	126.29	126.29
		Printed	Carwash Supplies	0.00	

Ref#	GL Number	Gross	Discount	Amount
77847	10-311-543.301	24.34	0.00	24.34
77850	10-311-543.301	49.83	0.00	49.83
77851	10-311-543.315	52.12	0.00	52.12
			Check Amount	126.29

63142	12/16/2019	OFFICE DEP	OFFICE DEPOT	500.70	500.70
		Printed	Office Supplies	0.00	

Ref#	GL Number	Gross	Discount	Amount
77852	10-161-522.000	190.30	0.00	190.30
77853	10-161-521.000	43.49	0.00	43.49

Check Number	Check Date / Void/Stop Date	Vendor# / Status	Vendor Name / Check Description	Gross / Discount	Amount
	77854	10-131-521.000	5.64	0.00	5.64
	77855	10-241-521.000	120.92	0.00	120.92
	77855	10-422-521.000	121.77	0.00	121.77
	77855	10-161-521.000	18.58	0.00	18.58
				Check Amount	500.70
63143	12/16/2019	ORTIZ'S TR	ORTIZ'S TREE SERVICE	1,200.00	1,200.00
		Printed	Street Trees - Lights Installe	0.00	

Ref#	GL Number	Gross	Discount	Amount
77848	10-425-556.000	720.00	0.00	720.00
77849	10-425-556.000	480.00	0.00	480.00
			Check Amount	1,200.00

63144	12/16/2019	PARTIDAJ	JOSHUE PARTIDA	62.50	62.50
		Printed	Critical Incident Response	0.00	

Ref#	GL Number	Gross	Discount	Amount
77888	10-311-551.000	62.50	0.00	62.50
			Check Amount	62.50

63145	12/16/2019	PARTS & SE	PARTS & SERVICE CTR- NAPA, INC	324.29	324.29
		Printed	Parts for Sewer Machine.	0.00	

Ref#	GL Number	Gross	Discount	Amount
77655	22-423-543.301	49.98	0.00	49.98
77656	22-423-543.301	-49.98	0.00	-49.98
77857	22-423-543.000	19.55	0.00	19.55
77858	22-423-543.000	145.71	0.00	145.71
77859	22-423-543.000	37.51	0.00	37.51
77860	18-412-543.301	108.47	0.00	108.47
77861	18-412-543.000	13.05	0.00	13.05
			Check Amount	324.29

63146	12/16/2019	PURE WATER	PENINSULA PURE WATER INC.	69.45	69.45
		Printed	Water - City Hall	0.00	

Ref#	GL Number	Gross	Discount	Amount
77862	10-311-541.101	37.75	0.00	37.75
77863	10-161-541.101	31.70	0.00	31.70
			Check Amount	69.45

63147	12/16/2019	PEREZ/JOEY	JOEY PEREZ	62.50	62.50
		Printed	Critical Incident Response	0.00	

Ref#	GL Number	Gross	Discount	Amount
77887	10-311-551.000	62.50	0.00	62.50
			Check Amount	62.50

63148	12/16/2019	PERRYB	PERRY BUILDERS	818.40	818.40
		Printed	Bldg - Plan Check Reimbursemen	0.00	

Ref#	GL Number	Gross	Discount	Amount
77764	10-000-471.004	366.74	0.00	366.74
77764	10-000-433.000	431.46	0.00	431.46
77764	10-000-471.009	4.20	0.00	4.20
77764	10-000-433.010	15.00	0.00	15.00
77764	10-000-433.103	1.00	0.00	1.00
			Check Amount	818.40

Check Number	Check Date / Void/Stop Date	Vendor# / Status	Vendor Name / Check Description	Gross / Discount	Amount
63149	12/16/2019	PAC	PG&E	154.42	154.42
		Printed	Electricity - #2351260399-6	0.00	

Ref#	GL Number	Gross	Discount	Amount
77735	10-311-541.102	81.81	0.00	81.81
77892	18-412-541.102	72.61	0.00	72.61
			Check Amount	154.42

Check Number	Check Date / Void/Stop Date	Vendor# / Status	Vendor Name / Check Description	Gross / Discount	Amount
63150	12/16/2019	PBGFS	PITNEY BOWES GLOBAL	174.73	174.73
		Printed	Postage - #0012318799	0.00	

Ref#	GL Number	Gross	Discount	Amount
77856	10-311-521.000	174.73	0.00	174.73
			Check Amount	174.73

Check Number	Check Date / Void/Stop Date	Vendor# / Status	Vendor Name / Check Description	Gross / Discount	Amount
63151	12/16/2019	QUILL CORP	QUILL CORPORATION	374.19	374.19
		Printed	Office Supplies	0.00	

Ref#	GL Number	Gross	Discount	Amount
77864	10-161-521.000	217.23	0.00	217.23
77865	10-161-521.000	59.80	0.00	59.80
77866	10-161-521.000	66.23	0.00	66.23
77866	10-121-521.000	30.93	0.00	30.93
			Check Amount	374.19

Check Number	Check Date / Void/Stop Date	Vendor# / Status	Vendor Name / Check Description	Gross / Discount	Amount
63152	12/16/2019	READINESS	READINESS NETWORK, INC	3,000.00	3,000.00
		Printed	Command & Staff Program	0.00	

Ref#	GL Number	Gross	Discount	Amount
77867	10-311-553.000	3,000.00	0.00	3,000.00
			Check Amount	3,000.00

Check Number	Check Date / Void/Stop Date	Vendor# / Status	Vendor Name / Check Description	Gross / Discount	Amount
63153	12/16/2019	RED SHIFT	RED SHIFT INTERNET SERVICES	30.90	30.90
		Printed	Internet Services - #25464	0.00	

Ref#	GL Number	Gross	Discount	Amount
77868	10-161-541.104	20.95	0.00	20.95
77869	10-161-541.104	9.95	0.00	9.95
			Check Amount	30.90

Check Number	Check Date / Void/Stop Date	Vendor# / Status	Vendor Name / Check Description	Gross / Discount	Amount
63154	12/16/2019	WADSW	ROD WADSWORTH CONSRUCTION	6,486.00	6,486.00
		Printed	325 Broadway Facade Grant	0.00	

Ref#	GL Number	Gross	Discount	Amount
77883	10-241-538.100	6,486.00	0.00	6,486.00
			Check Amount	6,486.00

Check Number	Check Date / Void/Stop Date	Vendor# / Status	Vendor Name / Check Description	Gross / Discount	Amount
63155	12/16/2019	SALVALP	S & L INVESTMENT	263.18	263.18
		Printed	K Bowen - Uniforms	0.00	

Ref#	GL Number	Gross	Discount	Amount
77871	10-311-522.109	263.18	0.00	263.18
			Check Amount	263.18

Check Number	Check Date / Void/Stop Date	Vendor# / Status	Vendor Name / Check Description	Gross / Discount	Amount
63156	12/16/2019	SV FAIR	SALINAS VALLEY FAIR	800.00	800.00
		Printed	Open Gym - BB	0.00	

Ref#	GL Number	Gross	Discount	Amount
77870	10-621-542.101	800.00	0.00	800.00

Check Number	Check Date / Void/Stop Date	Vendor# / Status	Vendor Name / Check Description	Gross / Discount	Amount
			Check Amount	800.00	
63157	12/16/2019	SANCHEZJAC	JACQUELINE SANCHEZ	500.00	500.00
		Printed	Rec Center Rental	0.00	

Ref#	GL Number	Gross	Discount	Amount
77756	71-000-204.103	500.00	0.00	500.00
			Check Amount	500.00

63158	12/16/2019	SANCHEZSAM	SAMUEL SANCHEZ	500.00	500.00
		Printed	Rec Center Rental	0.00	

Ref#	GL Number	Gross	Discount	Amount
77757	71-000-204.103	500.00	0.00	500.00
			Check Amount	500.00

63159	12/16/2019	TORRESSE	SANTA ELIZABETH TORRES	195.00	195.00
		Printed	Translating City Council	0.00	

Ref#	GL Number	Gross	Discount	Amount
77873	10-121-533.000	65.00	0.00	65.00
77874	10-121-533.000	130.00	0.00	130.00
			Check Amount	195.00

63160	12/16/2019	SENTRY	SENTRY	40.45	40.45
		Printed	Alarm System	0.00	

Ref#	GL Number	Gross	Discount	Amount
77875	10-161-522.000	40.45	0.00	40.45
			Check Amount	40.45

63161	12/16/2019	SOLT	SOL TREASURES	0.00	500.00
	12/19/2019	Void	Rec Center Rental	0.00	

Ref#	GL Number	Gross	Discount	Amount
			Check Amount	500.00

63162	12/16/2019	SPEAK	SPEAKWRITE BILLING DEPT	274.44	274.44
		Printed	Transcript Service.	0.00	

Ref#	GL Number	Gross	Discount	Amount
77876	10-311-533.000	274.44	0.00	274.44
			Check Amount	274.44

63163	12/16/2019	STATEWTS	STATEWIDE TRAFFIC SAFETY	3,155.38	3,155.38
		Printed	Traffic Cones &	0.00	

Ref#	GL Number	Gross	Discount	Amount
77761	22-423-543.214	3,155.38	0.00	3,155.38
			Check Amount	3,155.38

63164	12/16/2019	TORO	TORO PETROLEUM CORP.	3,914.79	3,914.79
		Printed	Gas - Acct #6835	0.00	

Ref#	GL Number	Gross	Discount	Amount
77877	10-311-543.302	1,803.50	0.00	1,803.50
77878	10-311-543.302	2,111.29	0.00	2,111.29
			Check Amount	3,914.79

Check Number	Check Date / Void/Stop Date	Vendor# / Status	Vendor Name / Check Description	Gross / Discount	Amount
63165	12/16/2019	U.S. BANCO	U.S. BANCORP EQUIPMENT FINANCE	244.08	244.08
		Printed	Copier Contract - #1152697	0.00	

Ref#	GL Number	Gross	Discount	Amount
77879	10-311-533.000	244.08	0.00	244.08
			Check Amount	244.08

Check Number	Check Date / Void/Stop Date	Vendor# / Status	Vendor Name / Check Description	Gross / Discount	Amount
63166	12/16/2019	U.S. BAN	U.S. BANK CORP PAYMENT SYSTEM	2,067.49	2,067.49
		Printed	Various Charges - 6938	0.00	

Ref#	GL Number	Gross	Discount	Amount
77748	10-621-521.000	46.75	0.00	46.75
77748	10-621-535.111	38.00	0.00	38.00
77748	10-621-522.000	109.53	0.00	109.53
77748	10-621-521.000	183.78	0.00	183.78
77748	10-621-522.000	154.77	0.00	154.77
77748	10-621-522.000	83.94	0.00	83.94
77748	10-621-522.000	131.58	0.00	131.58
77748	10-621-535.111	27.16	0.00	27.16
77748	10-621-552.000	450.00	0.00	450.00
77748	10-621-522.000	67.24	0.00	67.24
77748	10-621-522.000	10.76	0.00	10.76
77749	10-621-521.000	28.25	0.00	28.25
77749	10-621-522.000	60.00	0.00	60.00
77749	10-621-521.000	14.12	0.00	14.12
77749	10-621-522.000	560.00	0.00	560.00
77749	10-621-522.000	41.61	0.00	41.61
77749	10-621-522.000	60.00	0.00	60.00
			Check Amount	2,067.49

Check Number	Check Date / Void/Stop Date	Vendor# / Status	Vendor Name / Check Description	Gross / Discount	Amount
63167	12/16/2019	UNIRENT	UNITED RENTALS	4,994.81	4,994.81
		Printed	Equipment Rental - Vaccum	0.00	

Ref#	GL Number	Gross	Discount	Amount
77762	18-412-533.000	4,994.81	0.00	4,994.81
			Check Amount	4,994.81

Check Number	Check Date / Void/Stop Date	Vendor# / Status	Vendor Name / Check Description	Gross / Discount	Amount
63168	12/16/2019	VENTURAH	HENRY VENTURA	138.00	138.00
		Printed	Open Gym	0.00	

Ref#	GL Number	Gross	Discount	Amount
77747	10-621-538.110	138.00	0.00	138.00
			Check Amount	138.00

Check Number	Check Date / Void/Stop Date	Vendor# / Status	Vendor Name / Check Description	Gross / Discount	Amount
63169	12/16/2019	VERIZON WI	VERIZON WIRELESS	1,522.09	1,522.09
		Printed	Cell Phone - #842068026-00001	0.00	

Ref#	GL Number	Gross	Discount	Amount
77880	10-311-541.108	1,522.09	0.00	1,522.09
			Check Amount	1,522.09

Check Number	Check Date / Void/Stop Date	Vendor# / Status	Vendor Name / Check Description	Gross / Discount	Amount
63170	12/16/2019	WM J. CLAR	WM J. CLARK TRUCKING SVC, INC.	700.85	700.85
		Printed	Top Soil for Creekbridge	0.00	

Ref#	GL Number	Gross	Discount	Amount
77881	10-426-522.129	353.18	0.00	353.18
77882	10-426-522.129	347.67	0.00	347.67
			Check Amount	700.85

Check Number	Check Date / Void/Stop Date	Vendor# / Status	Vendor Name / Check Description	Gross / Discount	Amount
63171	12/16/2019	ZUMAR	ZUMAR INDUSTRIES INC.	1,483.97	1,483.97
		Printed	Street Signs for Parades.	0.00	

Ref#	GL Number	Gross	Discount	Amount
77884	22-423-522.122	1,483.97	0.00	1,483.97
			Check Amount	1,483.97

63172	12/19/2019	SOLT	SOL TREASURES	50.00	50.00
		Printed	Rec Center Rental	0.00	

Ref#	GL Number	Gross	Discount	Amount
77897	71-000-204.103	50.00	0.00	50.00
			Check Amount	50.00

63173	12/31/2019	ADAMSS	STEVEN ADAMS	23.78	23.78
		Printed	SoMoCo CM Meeting - 12/13/19	0.00	

Ref#	GL Number	Gross	Discount	Amount
77908	10-121-551.000	23.78	0.00	23.78
			Check Amount	23.78

63174	12/31/2019	DDAB	ADAN CELEDON	969.95	969.95
		Printed	Patrol Detail	0.00	

Ref#	GL Number	Gross	Discount	Amount
77899	10-311-543.301	969.95	0.00	969.95
			Check Amount	969.95

63175	12/31/2019	AGUILARE	ELENA AGUILAR	500.00	500.00
		Printed	Rec Center Rental Sec Dep	0.00	

Ref#	GL Number	Gross	Discount	Amount
77913	71-000-204.103	500.00	0.00	500.00
			Check Amount	500.00

63176	12/31/2019	KCTVHARD	ALCANTAR HARDWARE INC	590.32	590.32
		Printed	Sun Street -	0.00	

Ref#	GL Number	Gross	Discount	Amount
77919	10-311-521.000	109.80	0.00	109.80
77920	22-423-522.000	178.97	0.00	178.97
77921	10-630-543.000	19.97	0.00	19.97
77922	10-630-543.000	14.13	0.00	14.13
77923	22-424-522.118	208.77	0.00	208.77
77924	10-161-522.102	17.39	0.00	17.39
77925	10-161-522.102	18.47	0.00	18.47
77926	22-423-522.000	22.82	0.00	22.82
			Check Amount	590.32

63177	12/31/2019	A P W A	AMERICAN PUBLIC WORKS ASSOC	700.00	700.00
		Printed	Annual Dues -	0.00	

Ref#	GL Number	Gross	Discount	Amount
77917	10-422-552.000	700.00	0.00	700.00
			Check Amount	700.00

63178	12/31/2019	AM SUPPLY	AMERICAN SUPPLY CO.	807.20	807.20
		Printed	Janitorial Supply for Parks.	0.00	

Check Number	Check Date / Void/Stop Date	Vendor# / Status	Vendor Name / Check Description	Gross / Discount	Amount

Ref#	GL Number	Gross	Discount	Amount
77916	10-426-522.102	807.20	0.00	807.20
			Check Amount	807.20

Check Number	Check Date / Void/Stop Date	Vendor# / Status	Vendor Name / Check Description	Gross / Discount	Amount
63179	12/31/2019	ESTEBANW	ARTURO ESTABAN RESENDIZ	516.00	516.00
		Printed	Trailer Ramp for Mowers.	0.00	

Ref#	GL Number	Gross	Discount	Amount
77915	10-426-543.200	516.00	0.00	516.00
			Check Amount	516.00

Check Number	Check Date / Void/Stop Date	Vendor# / Status	Vendor Name / Check Description	Gross / Discount	Amount
63180	12/31/2019	AT & T	AT & T	97.58	97.58
		Printed	Telephone -	0.00	

Ref#	GL Number	Gross	Discount	Amount
77910	10-161-541.103	97.58	0.00	97.58
			Check Amount	97.58

Check Number	Check Date / Void/Stop Date	Vendor# / Status	Vendor Name / Check Description	Gross / Discount	Amount
63181	12/31/2019	AT & T	AT & T	215.77	215.77
		Printed	Telephone -	0.00	

Ref#	GL Number	Gross	Discount	Amount
77911	10-161-541.103	215.77	0.00	215.77
			Check Amount	215.77

Check Number	Check Date / Void/Stop Date	Vendor# / Status	Vendor Name / Check Description	Gross / Discount	Amount
63182	12/31/2019	AVIATION S	AVIATION SPECIALTIES	252.43	252.43
		Printed	Airport Fuel Tank Repairs	0.00	

Ref#	GL Number	Gross	Discount	Amount
77918	15-440-543.000	252.43	0.00	252.43
			Check Amount	252.43

Check Number	Check Date / Void/Stop Date	Vendor# / Status	Vendor Name / Check Description	Gross / Discount	Amount
63183	12/31/2019	AXON	AXON ENTERPRISE, INC	2,838.38	2,838.38
		Printed	New Tasers	0.00	

Ref#	GL Number	Gross	Discount	Amount
77914	10-311-522.110	2,838.38	0.00	2,838.38
			Check Amount	2,838.38

Check Number	Check Date / Void/Stop Date	Vendor# / Status	Vendor Name / Check Description	Gross / Discount	Amount
63184	12/31/2019	BAUER	BAUER COMPRESSORS INC	707.49	707.49
		Printed	Compressor Repair	0.00	

Ref#	GL Number	Gross	Discount	Amount
77927	10-321-543.200	707.49	0.00	707.49
			Check Amount	707.49

Check Number	Check Date / Void/Stop Date	Vendor# / Status	Vendor Name / Check Description	Gross / Discount	Amount
63185	12/31/2019	BENSON	RICHARD A. BENSON PLUMBING	127.00	127.00
		Printed	Repairs to line caused by	0.00	

Ref#	GL Number	Gross	Discount	Amount
77928	18-412-533.000	127.00	0.00	127.00
			Check Amount	127.00

Check Number	Check Date / Void/Stop Date	Vendor# / Status	Vendor Name / Check Description	Gross / Discount	Amount
63186	12/31/2019	CAL-WESTL	CAL-WEST LIGHTING AND	7,833.69	7,833.69
		Printed	Traffic Signal Battery	0.00	

Ref#	GL Number	Gross	Discount	Amount
77903	22-427-543.211	7,833.69	0.00	7,833.69
			Check Amount	7,833.69

Check Number	Check Date / Void/Stop Date	Vendor# / Status	Vendor Name / Check Description	Gross / Discount	Amount
63187	12/31/2019	CTOWT	CALIFORNIA TOWING & TRANSPORT	412.50	412.50
		Printed	Towing Truck to Salinas.	0.00	

Ref#	GL Number	Gross	Discount	Amount
77936	10-422-543.301	412.50	0.00	412.50
			Check Amount	412.50

63188	12/31/2019	CASEY PRIN	CASEY PRINTING, INC.	210.98	210.98
		Printed	Brochures	0.00	

Ref#	GL Number	Gross	Discount	Amount
77930	10-111-535.107	210.98	0.00	210.98
			Check Amount	210.98

63189	12/31/2019	CHALLENG	CHALLENGER TEAMWEAR	2,076.57	2,076.57
		Printed	Basketball Uniforms	0.00	

Ref#	GL Number	Gross	Discount	Amount
77906	10-621-522.109	2,076.57	0.00	2,076.57
			Check Amount	2,076.57

63190	12/31/2019	COASTAL	COASTAL TRACTOR	4,260.83	4,260.83
		Printed	Rotary Mower for Sewer -	0.00	

Ref#	GL Number	Gross	Discount	Amount
77935	15-440-543.200	2,130.41	0.00	2,130.41
77935	18-412-522.118	2,130.42	0.00	2,130.42
			Check Amount	4,260.83

63191	12/31/2019	CONATSER	CONATSER WELDING & MACHINE,LLC	105.00	105.00
		Printed	Repair Fork on the	0.00	

Ref#	GL Number	Gross	Discount	Amount
77929	10-430-543.200	105.00	0.00	105.00
			Check Amount	105.00

63192	12/31/2019	CULLEN	ROBERT CULLEN	896.99	896.99
		Printed	MJBizCon - Investor -	0.00	

Ref#	GL Number	Gross	Discount	Amount
77905	10-111-551.000	896.99	0.00	896.99
			Check Amount	896.99

63193	12/31/2019	DEMACIAS	MARIA VICTORIA DE MACIAS	15.00	15.00
		Printed	Refund on Garage Sale Permit.	0.00	

Ref#	GL Number	Gross	Discount	Amount
77937	10-000-434.000	15.00	0.00	15.00
			Check Amount	15.00

63194	12/31/2019	DISPENSING	DISPENSING TECHNOLOGY CORP	6,704.84	6,704.84
		Printed	Crack Sealing Material	0.00	

Ref#	GL Number	Gross	Discount	Amount
77938	22-423-543.214	6,704.84	0.00	6,704.84
			Check Amount	6,704.84

63195	12/31/2019	DON CHAPIN	DON CHAPIN CO., INC.	66,000.00	66,000.00
		Printed	Sediment removal - San Lorenzo	0.00	

Check Number	Check Date / Void/Stop Date	Vendor# / Status	Vendor Name / Check Description	Gross / Discount	Amount

Ref#	GL Number	Gross	Discount	Amount
77932	18-412-533.000	62,700.00	0.00	62,700.00
77933	18-412-533.000	3,300.00	0.00	3,300.00
			Check Amount	66,000.00

63196	12/31/2019	CPARK	G. DOUGLAS LAPP	794.51	794.51
		Printed	Play Structure Repair -	0.00	

Ref#	GL Number	Gross	Discount	Amount
77934	10-426-543.200	794.51	0.00	794.51
			Check Amount	794.51

63197	12/31/2019	GIS	GONZALES IRRIGATION SYSTEMS,	234.89	234.89
		Printed	Sprinkler for C B for Softball	0.00	

Ref#	GL Number	Gross	Discount	Amount
77939	10-426-522.129	46.80	0.00	46.80
77940	10-426-522.129	188.09	0.00	188.09
			Check Amount	234.89

63198	12/31/2019	GOLDST	HECTOR CHAVEZ	500.00	500.00
		Printed	Repair Leak - City Hall	0.00	

Ref#	GL Number	Gross	Discount	Amount
77941	10-161-543.100	500.00	0.00	500.00
			Check Amount	500.00

63199	12/31/2019	ICMC	INTEGRATED CROP MANAGEMENT	1,005.56	1,005.56
		Printed	Weed Controller -	0.00	

Ref#	GL Number	Gross	Discount	Amount
77942	18-412-543.000	1,005.56	0.00	1,005.56
			Check Amount	1,005.56

63200	12/31/2019	TORRESEL	JOSE G. TORRES	595.00	595.00
		Printed	Civic Center Work.	0.00	

Ref#	GL Number	Gross	Discount	Amount
77966	10-311-543.100	297.50	0.00	297.50
77966	10-161-543.100	297.50	0.00	297.50
			Check Amount	595.00

63201	12/31/2019	KC IND	KING CITY INDUSTRIAL SUPPLY	216.60	216.60
		Printed	Small tool for storm drains.	0.00	

Ref#	GL Number	Gross	Discount	Amount
77943	10-426-522.118	4.70	0.00	4.70
77944	10-426-522.118	9.08	0.00	9.08
77945	18-412-522.000	152.14	0.00	152.14
77946	18-412-522.000	29.96	0.00	29.96
77947	18-412-522.118	20.72	0.00	20.72
			Check Amount	216.60

63202	12/31/2019	LEBARRE	MIKE LEBARRE	779.68	779.68
		Printed	Conference - 12/9 to 12/11/19	0.00	

Ref#	GL Number	Gross	Discount	Amount
77904	10-111-551.000	779.68	0.00	779.68

Check Number	Check Date / Void/Stop Date	Vendor# / Status	Vendor Name / Check Description	Gross / Discount	Amount
			Check Amount	779.68	
63203	12/31/2019	LINCOLN	LINCOLN AQUATICS	1,573.10	1,573.10
		Printed	Supplies for Pool.	0.00	

Ref#	GL Number	Gross	Discount	Amount
77951	10-620-522.132	1,573.10	0.00	1,573.10
			Check Amount	1,573.10

63204	12/31/2019	XTEL	LS DE LLC	1,016.46	1,016.46
		Printed	Internet Service	0.00	

Ref#	GL Number	Gross	Discount	Amount
77948	10-161-541.103	930.31	0.00	930.31
77949	10-161-541.104	86.15	0.00	86.15
			Check Amount	1,016.46

63205	12/31/2019	LUX	BRENNAN LUX	51.08	51.08
		Printed	Reimbursement for Trash Bins	0.00	

Ref#	GL Number	Gross	Discount	Amount
77909	10-311-522.118	51.08	0.00	51.08
			Check Amount	51.08

63206	12/31/2019	MARTARMAN	ARMANDO MARTINEZ	500.00	500.00
		Printed	Rec Center Rental Sec Dep.	0.00	

Ref#	GL Number	Gross	Discount	Amount
77912	71-000-204.103	500.00	0.00	500.00
			Check Amount	500.00

63207	12/31/2019	MBLOVED	MONTEREY BAY LOVEDPET, INC	200.00	200.00
		Printed	Cremation Services	0.00	

Ref#	GL Number	Gross	Discount	Amount
77900	10-311-538.304	200.00	0.00	200.00
			Check Amount	200.00

63208	12/31/2019	MO CO EMER	MONTEREY COUNTY EMERGENCY	7,943.76	7,943.76
		Printed	2019/2020 Q1 & Q2	0.00	

Ref#	GL Number	Gross	Discount	Amount
77898	10-311-536.301	7,943.76	0.00	7,943.76
			Check Amount	7,943.76

63209	12/31/2019	MULLAHEY	MT MULLAHEY	525.65	525.65
		Printed	Patrol Repairs	0.00	

Ref#	GL Number	Gross	Discount	Amount
77901	10-311-543.301	525.65	0.00	525.65
			Check Amount	525.65

63210	12/31/2019	NEWSV	NEW SV MEDIA, INC	680.00	680.00
		Printed	Building Code Ordinances	0.00	

Ref#	GL Number	Gross	Discount	Amount
77907	10-121-554.102	510.00	0.00	510.00
77907	10-121-554.102	170.00	0.00	170.00
			Check Amount	680.00

Check Number	Check Date / Void/Stop Date	Vendor# / Status	Vendor Name / Check Description	Gross / Discount	Amount
63211	12/31/2019	O'REILLY A	O'REILLY AUTOMOTIVE, INC.	6.92	6.92
		Printed	Headlight Capsule	0.00	

Ref#	GL Number	Gross	Discount	Amount
77954	10-311-543.301	6.92	0.00	6.92
			Check Amount	6.92

63212	12/31/2019	OFFICE DEP	OFFICE DEPOT	388.02	388.02
		Printed	Office Equipment -	0.00	

Ref#	GL Number	Gross	Discount	Amount
77952	10-161-521.000	238.80	0.00	238.80
77952	10-121-521.000	100.73	0.00	100.73
77952	10-131-523.100	13.70	0.00	13.70
77953	10-131-523.100	34.79	0.00	34.79
			Check Amount	388.02

63213	12/31/2019	ORTIZ'S TR	ORTIZ'S TREE SERVICE	250.00	250.00
		Printed	Street Trees Clean Up.	0.00	

Ref#	GL Number	Gross	Discount	Amount
77955	10-425-556.000	250.00	0.00	250.00
			Check Amount	250.00

63214	12/31/2019	PACIFIC CR	PACIFIC CREST ENGINEERING INC.	4,950.00	4,950.00
		Printed	Semi Annual Well Testing.	0.00	

Ref#	GL Number	Gross	Discount	Amount
77956	42-773-532.303	4,950.00	0.00	4,950.00
			Check Amount	4,950.00

63215	12/31/2019	PAC	PG&E	27,288.67	27,288.67
		Printed	Utilities - #3845488588-0	0.00	

Ref#	GL Number	Gross	Discount	Amount
77950	18-412-541.102	5,517.94	0.00	5,517.94
77950	15-440-541.102	723.54	0.00	723.54
77950	10-621-541.102	500.96	0.00	500.96
77950	36-465-541.102	262.06	0.00	262.06
77950	10-430-541.102	719.88	0.00	719.88
77950	10-426-541.102	2,519.71	0.00	2,519.71
77950	22-427-541.102	13,649.30	0.00	13,649.30
77950	10-620-541.102	340.22	0.00	340.22
77950	10-321-541.102	582.37	0.00	582.37
77950	10-311-541.102	1,485.32	0.00	1,485.32
77950	10-161-541.102	987.37	0.00	987.37
			Check Amount	27,288.67

63216	12/31/2019	PNC	PNC EQUIPMENT FINANCE, LLC	103,309.99	103,309.99
		Printed	Solar Lease Payment	0.00	

Ref#	GL Number	Gross	Discount	Amount
77957	18-000-251.000	39,894.54	0.00	39,894.54
77957	18-412-582.400	22,041.12	0.00	22,041.12
77957	22-427-581.413	9,947.18	0.00	9,947.18
77957	22-427-582.400	5,495.67	0.00	5,495.67
77957	10-620-581.413	16,703.21	0.00	16,703.21
77957	10-620-582.400	9,228.27	0.00	9,228.27

Check Number	Check Date / Void/Stop Date	Vendor# / Status	Vendor Name / Check Description	Gross / Discount	Amount
			Check Amount	103,309.99	
63217	12/31/2019	THE SALINA	SALINAS NEWSPAPERS, LLC	988.45	988.45
		Printed	Building code notice of intent	0.00	

Ref#	GL Number	Gross	Discount	Amount
77931	10-000-204.853	742.35	0.00	742.35
77931	10-264-554.102	246.10	0.00	246.10
			Check Amount	988.45

63218	12/31/2019	SVSCLIENT	SOCIAL VOCATIONAL SERVICES	975.00	975.00
		Printed	Janitorial Services -	0.00	

Ref#	GL Number	Gross	Discount	Amount
77958	10-311-543.315	255.00	0.00	255.00
77958	10-311-543.102	720.00	0.00	720.00
			Check Amount	975.00

63219	12/31/2019	SPECTRUMB	SPECTRUM	223.98	223.98
		Printed	Rec Center Internet	0.00	

Ref#	GL Number	Gross	Discount	Amount
77959	10-621-541.103	223.98	0.00	223.98
			Check Amount	223.98

63220	12/31/2019	SWRCB - AC	SWRCB - ACCOUNTING OFFICE	73,200.00	73,200.00
		Printed	Annual Permit - 3 37M2000092	0.00	

Ref#	GL Number	Gross	Discount	Amount
77960	18-412-544.103	18,767.00	0.00	18,767.00
77961	18-412-544.103	18,767.00	0.00	18,767.00
77962	18-412-544.103	2,625.00	0.00	2,625.00
77963	42-773-544.103	24,502.00	0.00	24,502.00
77964	18-412-544.103	8,539.00	0.00	8,539.00
			Check Amount	73,200.00

63221	12/31/2019	SPCA	THE SPCA FOR MONTEREY COUNTY	1,600.00	1,600.00
		Printed	Animal Surrenders	0.00	

Ref#	GL Number	Gross	Discount	Amount
77967	10-311-538.304	1,600.00	0.00	1,600.00
			Check Amount	1,600.00

63222	12/31/2019	TRI	TRI-COUNTY FIRE PROTECTION INC	103.00	103.00
		Printed	Fire Sprinkler Inspection	0.00	

Ref#	GL Number	Gross	Discount	Amount
77965	12-510-543.000	103.00	0.00	103.00
			Check Amount	103.00

63223	12/31/2019	U.S. BANCO	U.S. BANCORP EQUIPMENT FINANCE	263.07	263.07
		Printed	City Hall Copier -	0.00	

Ref#	GL Number	Gross	Discount	Amount
77968	10-161-533.000	263.07	0.00	263.07
			Check Amount	263.07

63224	12/31/2019	U.S. BAN	U.S. BANK CORP PAYMENT SYSTEM	3,594.87	3,594.87
		Printed	Various Charges - #2065	0.00	

Check Number	Check Date / Void/Stop Date	Vendor# / Status	Vendor Name / Check Description	Gross / Discount	Amount

Ref#	GL Number	Gross	Discount	Amount
77902	10-321-522.133	283.51	0.00	283.51
77969	10-311-553.000	198.00	0.00	198.00
77969	10-311-551.000	20.15	0.00	20.15
77969	10-311-521.000	20.57	0.00	20.57
77969	10-311-521.000	50.00	0.00	50.00
77969	10-311-533.000	59.25	0.00	59.25
77969	10-311-533.000	47.40	0.00	47.40
77969	10-264-574.500	788.31	0.00	788.31
77969	10-311-551.000	15.00	0.00	15.00
77969	10-311-551.000	13.23	0.00	13.23
77969	10-311-551.000	6.05	0.00	6.05
77969	10-311-551.000	14.00	0.00	14.00
77969	10-311-521.000	337.48	0.00	337.48
77969	10-311-521.000	7.99	0.00	7.99
77969	10-311-553.000	195.00	0.00	195.00
77969	10-311-533.000	15.80	0.00	15.80
77969	10-311-521.000	338.28	0.00	338.28
77969	10-311-554.000	7.99	0.00	7.99
77969	10-311-533.000	19.75	0.00	19.75
77969	10-311-551.000	568.96	0.00	568.96
77970	10-111-535.107	14.84	0.00	14.84
77970	10-241-522.133	14.99	0.00	14.99
77970	10-241-522.133	14.99	0.00	14.99
77970	10-241-522.133	14.99	0.00	14.99
77971	10-430-541.101	27.20	0.00	27.20
77971	10-426-522.129	10.00	0.00	10.00
77971	10-422-551.000	93.60	0.00	93.60
77971	10-422-551.000	28.93	0.00	28.93
77971	10-425-522.000	268.66	0.00	268.66
77971	10-425-522.000	99.95	0.00	99.95
			Check Amount	3,594.87

63225	12/31/2019	VERIZON WI	VERIZON WIRELESS	216.11	216.11
		Printed	Cell Phones -	0.00	

Ref#	GL Number	Gross	Discount	Amount
77972	10-621-541.108	25.79	0.00	25.79
77972	10-422-541.108	120.44	0.00	120.44
77972	10-321-541.108	26.77	0.00	26.77
77972	10-161-541.108	0.16	0.00	0.16
77972	10-121-541.108	42.95	0.00	42.95
			Check Amount	216.11

Total Checks:	132	Bank Total(excluding void checks):	510,970.60
Total Checks:	132	Grand Total(excluding void checks):	510,970.60

KING CITY
CALIFORNIA

Item No. 9(C)

REPORT TO THE SUCCESSOR AGENCY TO THE FORMER KING CITY CDA

DATE: **JANUARY 14, 2020**

TO: **HONORABLE CHAIR AND MEMBERS OF THE BOARD**

FROM: **MIKE HOWARD, FINANCE DIRECTOR**

RE: **CONSIDERATION OF SUCCESSOR AGENCY CHECK REGISTER FOR DECEMBER 2019**

RECOMMENDATION:

It is recommended the City Council acting as the Successor Agency Board receive and file.

BACKGROUND:

At least once a month, the City Treasurer shall submit to the Successor Agency Board, a copy of the invoices paid for the previous month.

DISCUSSION:

The purpose of this item is to provide the Council an opportunity to review and monitor ongoing expenditures. These documents are attached.

COST ANALYSIS:

There is no fiscal impact as a result of this action.

ENVIRONMENTAL REVIEW:

No Environmental Review required for this item.

ALTERNATIVES:

The following alternatives are provided for Council consideration:

1. Receive and file the report; or
2. Provide other direction to staff regarding requests for additional information.

Exhibits:
1. Check Register Report

Submitted by: E.L. Sonne for
Mike Howard, Finance Director

Approved by:
Steven Adams, City Manager

Check Register Report

DECEMBER 2019

Date: 01/08/2020
Time: 11:18 am
Page: 1

ING CITY CITY HALL

BANK: SUCCESSOR AGENCY OF

Check Number	Check Date / Void/Stop Date	Vendor# / Status	Vendor Name / Check Description	Gross / Discount	Amount
270	12/16/2019	GREEN'S	GREEN'S ACCOUNTING	1,100.00	1,100.00
		Printed	Successor Agency	0.00	

Ref#	GL Number	Gross	Discount	Amount
77896	61-000-534.102	1,100.00	0.00	1,100.00
			Check Amount	1,100.00

Total Checks:	**1**	**Bank Total(excluding void checks):**	**1,100.00**
Total Checks:	**1**	**Grand Total(excluding void checks):**	**1,100.00**

KING CITY
CALIFORNIA

Item No. 9(D)

REPORT TO THE CITY COUNCIL

DATE: **JANUARY 14, 2020**

TO: **HONORABLE MAYOR AND MEMBERS OF THE CITY COUNCIL**

FROM: **STEVEN ADAMS, CITY MANAGER**

RE: **CONSIDERATION OF APPROPRIATION FOR FIRE SAFETY CLOTHING**

RECOMMENDATION:

It is recommended the City Council appropriate $20,000 for fire safety clothing.

BACKGROUND:

The Fire Department recently applied for and received approval for a firefighters grant from California Water Service to pay for additional replacement of firefighter turnout clothing and equipment. However, this funding needs to be appropriated in order to proceed with the expenditure.

DISCUSSION:

The Fire Department's firefighter turnouts are approximately 10 years old and in need of replacement. The grant enables the Fire Department to replace all the existing turnouts this year rather than having to fund it over a multi-year period.

COST ANALYSIS:

The funding for the appropriation will all be paid from revenues from the California Water Service grant. There is currently $20,000 in the General Fund budgeted for safety clothing. This action will increase the budget to $40,000 for FY 2019-20.

ENVIRONMENTAL REVIEW:

The appropriation is not a "project" for the purposes of the California Environmental Quality Act (CEQA). Therefore, the change does not have the potential for resulting in either a direct physical change to the environment or a

reasonably foreseeable indirect physical change in the environment. No further action is required under CEQA for City Council action.

ALTERNATIVES:

The following alternatives have been identified for City Council consideration:

1. Approve staff's recommendation;
2. Do not approve the appropriation and reject the grant; or
3. Provide other direction to staff.

Prepared and Approved by: _____
Steven Adams, City Manager

KING CITY
CALIFORNIA

Item No. 9(E)

REPORT TO THE CITY COUNCIL

DATE: **JANUARY 14, 2020**

TO: **HONORABLE MAYOR AND MEMBERS OF THE CITY COUNCIL**

FROM: **STEVEN ADAMS, CITY MANAGER**

RE: **CONSIDERATION OF AMENDMENT TO MASTER FEE SCHEDULE**

RECOMMENDATION:

It is recommended the City Council adopt a Resolution amending the Master Fee Schedule to increase certain aquatics center fees and establish a new Cannabis Conditional Operations Permit Issuance and Renewal Fee.

BACKGROUND:

State legislation once again increased the minimum wage this year effective January 1, 2020, which results in an increase in cost of operating the summer pool program. As a result, as has been done the past several years, staff recommends a fee increase necessary to recover some of the additional costs.

In addition, cannabis permit applicants need conditional approvals to demonstrate to the State that they have received local approval in order to obtain their State permits. Final City operations permits are not granted until they are ready to operate and final inspections of their facilities have been approved. As a result, the City refers to these original approvals as "Conditional Operations Permits." It was originally anticipated that it would provide the applicant time to obtain their State permit, complete the final requirements, and then pay their final permit fee to obtain their Operations Permit. However, many have been delayed several years. Therefore, they have requested renewal of their conditional operations permits to keep their State permits valid. As a result, staff is recommending a separate fee be established for this action.

DISCUSSION:

Staff recommends the following aquatics fee adjustments:

- Increase in individual pool entrance fee for 9 years and older from $3.50 to $4.00
- Increase the fee for 10 pool visits for 9 years and older from $30.00 to $35.00
- Increase the individual summer pass fee from $90 to $100

These adjustments will make King City's daily fees equal to the fees charged by the City of Gonzales, and they will remain less than Soledad.

Currently, the cannabis operations permit issuance and renewal fee is $15,000. That fee is established at an amount sufficient to reimburse the City for costs for annual inspections, code enforcement, public safety and other ongoing impacts. Applicants with conditional operations permits are not yet operating. Therefore, none of these costs apply. As a result, it would not be fair to charge them a $15,000 fee. Instead, staff recommends a conditional operations permit issuance and renewal fee of $500 be established in order to address costs involved in tracking, administering and processing renewal of these permits.

COST ANALYSIS:

It is estimated the aquatics fee adjustments will increase annual revenue by approximately $2,000. The projected revenue from the conditional operations permit issuance and renewal fee is approximately $35,000.

ENVIRONMENTAL REVIEW:

The Master Fee Schedule adjustments are not a "project" for the purposes of the California Environmental Quality Act (CEQA) as they do not have the potential for resulting in either a direct physical change to the environment or a reasonably foreseeable indirect physical change in the environment. No further action is required under CEQA for City Council action.

ALTERNATIVES:

The following alternatives are provided for City Council consideration:

1. Adopt the Resolution;
2. Further increase fees to reach full cost recovery for the minimum wage increase;
3. Make other changes to the Master Fee Schedule and adopt the Resolution;
4. Do not approve the proposed changes;
5. Provide staff with other direction.

Prepared and Approved by: _____
Steven Adams, City Manager

RESOLUTION NO. 2020-

RESOLUTION OF THE CITY COUNCIL OF THE CITY OF KING APPROVING AN UPDATED MASTER FEE SCHEDULE

WHEREAS, the City of King maintains a Master Fee Schedule of all user fees; and

WHEREAS, the purpose of user fees is for users of services to pay the cost of providing that service; and

WHEREAS, the City reviews and updates the Master Fee Schedule on a periodic basis to ensure that fees accurately reflect changes in costs to provide services; and

WHEREAS, constraints on the City's General Fund tax revenues make it necessary to seek cost recovery of services through user fees; and

WHEREAS, the increase in the State minimum wage has caused an increase in the cost to operate the City Aquatics Center; and

WHEREAS, the City Council has determined a fee increase for usage of the Aquatics Center is necessary in order to fund a portion of the increased cost; and

WHEREAS, the City issues Conditional Cannabis Operations Permits and processes annual permit renewal requests; and

WHEREAS, the City Council has determined a Conditional Cannabis Operations Permit Issuance and Renewal Fee is necessary in order to reimburse the City for costs associated with tracking, administering and processing these permits and permit renewals.

NOW, THEREFORE, BE IT HEREBY RESOLVED that the City Council of the City of King hereby approves the Master Fee Schedule attached and included herein as Exhibit A.

This resolution was passed and adopted this **14th** day of **January, 2020** by the following vote:

AYES, Council Members:

NAYS, Council Members:

ABSENT, Council Members:

ABSTAIN, Council Members:

APPROVED:

_____
Mike LeBarre, Mayor

ATTEST:

_____
Steven Adams, City Clerk

APPROVED AS TO FORM:

_____
Roy Santos, City Attorney

Exhibit A

KING CITY MASTER FEE SCHEDULE
Effective 2/1/2020

Fee	Per Unit	Fee	Minimum
Franchise Fees			
PG&E Electric Franchise Fee		2.00%	
CATV Franchise Fee		5.00%	
Refuse Franchise Fee		18.00%	
Cal Water Franchise Fee		2.00%	
City Hall Front Counter Fees			
Bicycle License		$10.00	
Garage Sale Permit		$15.00	
Returned Check Charge		$40.00	
Rebilling Fee		$5.00	
Copies - Black and White		$.25 per page	
Copies - Color		$1.50 per page	
Fireworks Sales Application	Annual	$35.00	
Fireworks Stand Permit	Per stand per year	$375.00	
Fireworks Stand Inspection outside normal business hours	As required	$150.00	
Fireworks Sales Stand Deposit	Annual	$1,000.00	
Vacant Building Plan	Per Plan Ordered	$1,000.00	
Public Works Permit Fees			
Staff Time		Actual Cost Plus 5% Administrative Fee	
Encroachment Permit - General		$375.00	
Encroachment Permit - Electric and Gas Utilities	Annual/Service Improvements	$5,000.00	
Encroachment Permit - Water Utilities	Annual/Service Improvements	$7,500.00	
Encroachment Permit - Utilities	Major Trunkline Replacements	Actual Cost	
Administration Services		Actual Cost	
Curb/Sidewalk/Driveway Review		Actual Cost	$300.00
Encroachment Permit - Sidewalk Repairs Due to Tree Damage		No Charge	

KING CITY MASTER FEE SCHEDULE
Effective 2/1/2020

Fee	Per Unit	Fee	Minimum
Police Department Fees			
Police Special Services		Actual Cost	
False Alarm Fee	Third false alarm in 12 months	$200.00	
	Fourth false alarm in 12 months	$300.00	
	Fifth false alarm in 12 months	$400.00	
	Additional false alarms in 12 months	$500.00	
Finger Printing		$20.00	
Tow Provider Application		$75.00	
Vehicle Releases		$150.00	
Immigration Letters		$20.00	
Citation Sign Offs		$15.00	
Room Rental	First hour	$25.00	
	Each additional hour	$15.00	
Special Event Permits	Event	$27.00	Plus actual cost
DUI Response Charges		$256.00	
Police Reports	First three pages	$15.00	
	Each additional page	$2.50	
	Maximum charge per report	$30.00	
Concealed Weapon Permit	Initial	$125.00	
	Renewal	$25.00	
Animal Control Fees			
Licensing Fees (Spayed/Neutered)	1 month to 1 year	$10.00	
	13 months to 2 years	$15.00	
	25 months to 3 years	$30.00	
	Seniors over 60 up to 3 years	$9.00	
Licensing Fees (Not Spayed/Neutered)	1 month to 1 year	$40.00	
	13 months to 2 years	$50.00	
	25 months to 3 years	$60.00	

KING CITY MASTER FEE SCHEDULE
Effective 2/1/2020

Fee	Per Unit	Fee	Minimum
Animal Control Fees (Continued)			
Impound Fees (Spayed/Neutered)	First time	$25.00	
	Second time	$40.00	
	Third time	$55.00	
Impound Fees (Not Spayed/Neutered)	First time	$35.00	
	Second time	$50.00	
	Third time	$80.00	
Reclaiming of Impound		$10.00	
Care and Feeding of Animals (Excludes medical care)			
Dog	Per day	$10.00	
Cat	Per day	$10.00	
Late fee for renewal llicense		$20.00	
Euthanasia & Disposing of Animal	25 lbs. or less	$63.00	
	26-50 lbs.	$71.00	
	51 - 75 lbs.	$79.00	
	76 - 100 lbs.	$86.00	
	101 lbs. or more	$94.00	
Adoption Charges (Does Not Include Spay/Neuter Surgery)			
Dog		$10.00	
Cat		$10.00	
Medical Care		Actual Cost	
Surrender Fee		$50.00	

KING CITY MASTER FEE SCHEDULE
Effective 2/1/2020

Fee	Per Unit	Fee	Minimum
Community Development Department Fees			
Staff Time		Actual Cost Plus 5% Administrative Fee	
Annexation		Actual Cost	$8,000.00
Appeals			
City Council		Actual Cost	$250.00
Planning Commission		Actual Cost	$250.00
Architectural Review			
New		Actual Cost	$600.00
Amendment		Actual Cost	$400.00
Cannabis Cultivation/Nursery/Manufacturing/Testing/Retail/Distribution/Microbusiness Permit			
Operations Permit Application	Per Application	Actual Cost	
Operations Permit Issuance and Renewal	Annual	$15,000.00	
Conditional Operations Permit Issuance and Renewal	Annual	$500.00	
Certificate of Compliance		Actual Cost	$300.00
Conditional Use Permit			
Remodel/Change of Use		Actual Cost	$1,000.00
New Construction		Actual Cost	$3,000.00
Amendment		Actual Cost	$650.00
Temporary Use Permit		Actual Cost	$300.00
Mural Permit		Actual Cost	$300.00
Condominium Conversion		Actual Cost	$3,000.00
Development Agreement			
New		Actual Cost	$5,000.00
Amendment		Actual Cost	$3,000.00
Environmental Review			
Categorical Exemption		Actual Cost	$100.00
Environmental Impact Report Admin		Actual Cost	$500.00
Environmental Impact Report	Residential - Per Lot	Actual Cost	$2,000.00
	Other - Per Lot	Actual Cost	$250.00

KING CITY MASTER FEE SCHEDULE
Effective 2/1/2020

Fee	Per Unit	Fee	Minimum
Community Development Department Fees (continued)			
Environmental Impact Report Review			
Negative Declaration Fee		Actual Cost	$600.00
Mitigated Negative Declaration Fee		Actual Cost	$800.00
Negative Declaration Fish & Game		Actual Cost	$100.00
Filing Fee with County Clerk		Actual Cost	
General Plan Amendment		Actual Cost	$2,000.00
General Plan Consistency Review		Actual Cost	$300.00
Home Occupation Permit		$150.00	
Interpretation from City Council of Planning Commission		Actual Cost	$300.00
Landscaping Plan Review		Actual Cost	$300.00
Lot Line Adjustment		Actual Cost	$500.00
Miscellaneous Items			
Fence/Wall Review		Actual Cost	$100.00
Radius Map and Mailing (Noticing)		Actual Cost	$250.00
Records Research Fee		Actual Cost	$100.00
Plot Plan Review			
Major Plot Plan Review		Actual Cost	$600.00
Minor Plot Plan Review		Actual Cost	$300.00
Pre Application Review		Actual Cost	$500.00
Specific Plan and Planned Development			
New		Actual Cost	$5,000.00
Amendment		Actual Cost	$1,000.00
Planned Development		Actual Cost	$1,000.00
Sign Permit			
Individual Permanent Sign		Actual Cost	$300.00
Master Sign Program		Actual Cost	$462.00
Temporary Sign Permit		Actual Cost	$100.00
Penalty for No Sign Permit		Actual Cost	$300.00
Sphere of Influence Amendment		Actual Cost	$3,200.00

KING CITY MASTER FEE SCHEDULE
Effective 2/1/2020

Fee	Per Unit	Fee	Minimum
Community Development Department Fees (continued)			
Subdivision		Actual Cost	$5,000.00
Tentative Tract Map and Parcel Maps			
Vesting		Actual Cost	$2,000.00
			Plus $30.00 per lot
Non-Vesting		Actual Cost	$2,000.00
			Plus $50.00 per lot
Time Extensions		Actual Cost	$300.00
Variance		Actual Cost	$750.00
Wireless Facilities on Public Right-Of-Way			
Individual Small Facilities		Actual Cost	$2,000.00
2 or More Small Facilities		Actual Cost	$4,000.00
Major Facilities			
Zoning Change Text & Map			
New		Actual Cost	$2,000.00
Pre-Zoning Request		Actual Cost	$600.00
Building Department Fees			
Staff Time		Actual Cost Plus 5% Administrative Fee	
Minimum Permit Fee	Per Permit	$100.00	
Certificate of Occupancy		$180.00	
Building Permit Fees	Per Permit Based on Valuation	2018 International Code Council	
Plan Check Fees	Per Permit Based on Valuation	2018 International Code Council	
Model Home Production Plan Check Fee	Per Permit	$150.00	
Permit Issuance Fee	Per Permit	$100.00	
Building Permit Training Surcharge	Per Permit	$15.00	
Landscape Water Efficiency Review	Per Review	$130.00	
Minor Building, Electrical and Plumbing Permit	Per Permit	$60.00	

KING CITY MASTER FEE SCHEDULE
Effective 2/1/2020

Fee	Per Unit	Fee	Minimum
Building Department Fees (continued)			
Solar Energy System			
Residential	Up to 15 Kilowatts	$450.00	
	Per Additional kW Above 15	$15.00	
Commercial	Up to 50 Kilowatts	$1,000.00	
	Per Additional kW 51 kW to 250 kW	$7.00	
	Per Additional kW Above 250 kW	$5.00	
Re-Roof Fee			
Buildup, Shingle or Wood Shake		$170.00	
Concrete Tile, Clay Tile or Metal		$285.00	
Fence or Wall Over 6 Feet High	Per Permit Based on Valuation	2018 International Code Council	
Property Inquiry Fee	Per Inquiry	$65.00	
Demolition Permit		Actual Cost	$150.00
Building Moving Fee		Actual Cost	$350.00
Street Address Change		$50.00	
Waste Reduction and Recycling Plan Fee	Per Building	$125.00	
	Per Subdivision	$300.00	
Fire Department Fees			
Annual Fire Inspection	Per Inspection and One Re-Inspection	$200.00	
Fire Re-Inspection	Per Inspection After First Two	$125.00	
Commercial Aboveground Fire Sprinkler System	Per Permit and Up to Two Inspections	$341.25	
Commercial Underground Fire Main System	Per Permit and Up to Two Inspections	$498.55	
Commercial Fire Alarm Systems	Per Permit and Up to Two Inspections	$262.50	
Commercial Hood & Duct Suppression System	Per Permit and Up to Two Inspections	$262.50	
Commercial Fire Pump Systems	Per Permit and Up to Two Inspections	$367.50	
Residential (Household) Fire Sprinkler System	Per Permit and Up to Two Inspections	$262.50	
Residential (Household) Fire Alarm System	Per Permit and Up to Two Inspections	$157.50	
Fire Alarm Technology Transfer Projects	Per Permit and Up to Two Inspections	$105.00	

KING CITY MASTER FEE SCHEDULE
Effective 2/1/2020

Fee	Per Unit	Fee	Minimum
Recreation Department Fees			
Aquatic Center			
Daily Entrance Fee			
8 years and under	Day	$3.00	
8 years and under pass	10 visits	$25.00	
9 years and older	Day	$4.00	
9 years and older pass	10 visits	$35.00	
Summer Swim Pass			
Individual	Season	$100.00	
Family (immediate family up to 4)	Season	$300.00	
Each individual family member over 4		$25.00	
Swim Lessons			
Private	45 minutes	$30.00	
Semi-private	45 mintues	$20.00	
Group	45 minutes	$50.00	
Sibling (Group Lesson)	45 minutes	$35.00	
Late Fee - Swim Lesson Registration	Percent of registration fee	20.00%	
Summer Day Camp (5-12 year olds)	Day	$15.00	
	Week	$75.00	
Basketball			
Adult - Open Gym	Night	$4.00	
Girls and Boys	Child per season	$60.00	
	2 children per season	$100.00	
	3 children per season	$130.00	

KING CITY MASTER FEE SCHEDULE
Effective 2/1/2020

Fee	Per Unit	Fee	Minimum
Recreation Department Fees (continued)			
Facility/Amenity Rentals			
Aquatic Complex			
Wade Pool	Hour Non-Profit	$40.00	
	Hour Private	$52.00	
Dive Pool	Hour Non-Profit	$80.00	
	Hour Private	$100.00	
Lap Pool	Hour Non-Profit	$80.00	
	Hour Private	$100.00	
Slide Pool	Hour Non-Profit	$100.00	
	Hour Private	$120.00	
Additional Supervision	Hour	Actual Cost	
Concession Stands - Centennial/Arena/SAP	Day Private	$102.00	
Equipment			
Dunk Tank	Day Non-Profit	$50.00	
	Day Private	$60.00	
Field Reservations			
Ballfields w/o Lights - Games/Tournaments	Hour Non-Profit	$20.00	
	Hour Private	$25.00	
Ballfields w/Lights - Games/Tournaments	Hour Non-Profit	$28.00	
	Hour Private	$30.00	
Ballfields w/o Lights - Practice	Hour Non-Profit	$3.50	
	Hour Private	$6.00	
Ballfields w/Lights - Practice	Hour Non-Profit	$12.00	
	Hour Private	$20.00	
Soccer-Multi-Sports Fields w/o Lights	Hour Non-Profit	$20.00	
	Hour Private	$25.00	
Soccer-Multi-Sports Fields w/Lights	Hour Non-Profit	$25.00	
	Hour Private	$30.00	
Use of City Park for Major Events	Day	$160.00	

KING CITY MASTER FEE SCHEDULE
Effective 2/1/2020

Fee	Per Unit	Fee	Minimum
Recreation Department Fees (continued)			
Joint Facility Agreement With Other Public Agencies	Day	$0	
Raquetball (Access up to four)	Year	$110.00	
	Quarter	$30.00	
	Month	$10.00	
	Day	$2.00	
Recreation Center	Hour Non-Profit	$20.00	
	Hour Private	$60.00	
Security Deposit	Event - Before 5:00 p.m. and no alcohol	$50.00	
	Event - After 5:00 p.m. and/or alcohol	$500.00	
Set Up Fee	Day	$75.00	
Security Fee Per Guard	Hour	$25.00	
Shelter/Picnic Reservations			
Picnic Shelters	Day Non-Profit	$40.00	
	Day Private	$80.00	
Park Open Spaces	Day Non-Profit	$12.00	
	Day Private	$125.00	
Volleyball Court	Day Non-Profit	$6.00	
	Day Private	$30.00	
Softball - Girls	Child per season	$60.00	
	2 children per season	$100.00	
	3 children per season	$130.00	
Miscellaneous Fees			
Personnel	Hour	Actual Cost Plus 5% Administrative Fee	

KING CITY MASTER FEE SCHEDULE
Effective 2/1/2020

Fee	Per Unit	Fee	Minimum
Airport Fees			
T-Hanger	Monthly	$130.00	
Tie Down	Monthly	$42.00	
Office Space	Monthly	$54.00	
Commercial Operators	Monthly	$54.00	
	Each additional aircraft	$42.00	
Crop Dusting	Monthly	$68.00	
	Daily	$12.00	
Crop Dusting Storage Area	Monthly	$54.00	
Airplane/Helicopter Transit Fee	Daily	$8.00	
Vehicle Transit Fee	Monthly	$22.00	
Major Temporary Staging Operation	Daily	$200.00	

KING CITY MASTER FEE SCHEDULE
Effective 2/1/2020

Fee	Per Unit	Fee	Minimum
Impact Fees for Projects Vested as of August 21, 2010			
Law Enforcement Facilities			
Single Family Dwelling	Unit	$881.22	
Multiple Family Dwelling	Unit	$249.16	
Mobile Home Dwelling	Unit	$251.45	
Commercial Lodging Unit	Unit	$2,130.47	
Commercial	Square foot	$0.40	
Industrial	Square foot	$0.01	
Fire Protection Facilities			
Single Family Dwelling	Unit	$865.22	
Multiple Family Dwelling	Unit	$692.64	
Mobile Home Dwelling	Unit	$692.64	
Commercial Lodging Unit	Unit	$376.03	
Commercial	Square foot	$0.57	
Industrial	Square foot	$0.16	
Bridges Signals and Thoroughfares			
Single Family Dwelling	Unit	$2,181.91	
Multiple Family Dwelling	Unit	$1,385.26	
Mobile Home Dwelling	Unit	$1,098.38	
Commercial Lodging Unit	Unit	$1,160.10	
Commercial	Square foot	$5.30	
Industrial	Square foot	$0.87	

KING CITY MASTER FEE SCHEDULE
Effective 2/1/2020

Fee	Per Unit	Fee	Minimum
Impact Fees for Projects Vested as of August 21, 2010 (continued)			
Storm Drainage Facilities			
Single Family Dwelling	Unit	$521.29	
Multiple Family Dwelling	Unit	$246.92	
Mobile Home Dwelling	Unit	$289.22	
Commercial Lodging Unit	Unit	$181.77	
Commercial	Square foot	$0.30	
Industrial	Square foot	$0.25	
General Government Facilities			
Single Family Dwelling	Unit	$757.79	
Multiple Family Dwelling	Unit	$757.79	
Mobile Home Dwelling	Unit	$757.79	
Commercial Lodging Unit	Unit	$757.79	
Commercial	Square foot	$0.32	
Industrial	Square foot	$0.32	
Library Expansion Facilities			
Single Family Dwelling	Unit	$500.61	
Multiple Family Dwelling	Unit	$533.76	
Mobile Home Dwelling	Unit	$494.90	
Commercial Lodging Unit	Unit	-	
Commercial	Square foot	-	
Industrial	Square foot	-	

KING CITY MASTER FEE SCHEDULE
Effective 2/1/2020

Fee	Per Unit	Fee	Minimum
Impact Fees for Projects Vested as of August 21, 2010 (continued)			
Public Meeting Facilities			
Single Family Dwelling	Unit	$705.21	
Multiple Family Dwelling	Unit	$754.35	
Mobile Home Dwelling	Unit	$697.21	
Commercial Lodging Unit	Unit	-	
Commercial	Square foot	-	
Industrial	Square foot	-	
Aquatic Center Facilities			
Single Family Dwelling	Unit	$697.21	
Multiple Family Dwelling	Unit	$746.35	
Mobile Home Dwelling	Unit	$690.35	
Commercial Lodging Unit	Unit	-	
Commercial	Square foot	-	
Industrial	Square foot	-	
Park and Open Space Acquisition			
Single Family Dwelling	Unit	$3,675.75	
Multiple Family Dwelling	Unit	$3,932.91	
Mobile Home Dwelling	Unit	$3,639.17	
Commercial Lodging Unit	Unit	-	
Commercial	Square foot	-	
Industrial	Square foot	-	

KING CITY MASTER FEE SCHEDULE
Effective 2/1/2020

Fee	Per Unit	Fee	Minimum
Impact Fees for Projects Vested as of August 21, 2010 (continued)			
Total Impact Fees			
Single Family Dwelling	Unit	$11,152.92	
Multiple Family Dwelling	Unit	$9,615.32	
Mobile Home Dwelling	Unit	$8,903.88	
Commercial Lodging Unit	Unit	$4,762.77	
Commercial	Square foot	$7.13	
Industrial	Square foot	$1.66	
Impact Fees for Projects Vested after August 21, 2010			
Law Enforcement Facilities			
Single Family Dwelling	Unit	$847.64	
Multiple Family Dwelling	Unit	$134.88	
Mobile Home Dwelling	Unit	$85.08	
Commercial Lodging Unit	Unit	$193.50	
Seasonal Employee Housing	Bed	$10.64	
Commercial	Square foot	$0.373	
Industrial	Square foot	$0.003	
Storage Units	Square foot	$0.206	
Fire Protection Facilities			
Single Family Dwelling	Unit	$693.57	
Multiple Family Dwelling	Unit	$533.80	
Mobile Home Dwelling	Unit	$351.72	
Commercial Lodging Unit	Unit	$0.216	
Seasonal Employee Housing	Bed	$66.73	
Commercial	Square foot	$0.160	
Industrial	Square foot	$0.010	
Storage Units	Square foot	$0.010	
Buildings 3-Story and Above	Building	Fee plus $30,000	

KING CITY MASTER FEE SCHEDULE
Effective 2/1/2020

Fee	Per Unit	Fee	Minimum
Impact Fees for Projects Vested after August 21, 2010 (continued)			
Bridges Signals and Thoroughfares			
Single Family Dwelling	Unit	$3,829.42	
Multiple Family Dwelling	Unit	$2,556.40	
Mobile Home Dwelling	Unit	$2,003.42	
Commercial Lodging Unit	Unit	$2,014.31	
Seasonal Employee Housing	Bed	$159.78	
Commercial	Square foot	$4.635	
Industrial	Square foot	$2.502	
Storage Units	Square foot	$1.096	
Storm Drainage Facilities			
Single Family Dwelling	Unit	$1,321.50	
Multiple Family Dwelling	Unit	$475.00	
Mobile Home Dwelling	Unit	$526.00	
Commercial Lodging Unit	Unit	$240.50	
Seasonal Employee Housing	Bed	$59.38	
Commercial	Square foot	$0.452	
Industrial	Square foot	$0.365	
Storage Units	Square foot	$0.246	
General Government Facilities			
Single Family Dwelling	Unit	$582.50	
Multiple Family Dwelling	Unit	$582.50	
Mobile Home Dwelling	Unit	$582.50	
Commercial Lodging Unit	Unit	$161.50	
Seasonal Employee Housing	Bed	$72.81	
Commercial	Square foot	$0.204	
Industrial	Square foot	$0.204	
Storage Units	Square foot	$0.204	

KING CITY MASTER FEE SCHEDULE
Effective 2/1/2020

Fee	Per Unit	Fee	Minimum
Impact Fees for Projects Vested after August 21, 2010 (continued)			
Wastewater Collection System			
Single Family Dwelling	Unit	$2,463.03	
Multiple Family Dwelling	Unit	$1,458.73	
Mobile Home Dwelling	Unit	$1,458.73	
Commercial Lodging Unit	Unit	$552.99	
Seasonal Employee Housing	Bed	$182.34	
Commercial	Square foot	$0.668	
Industrial	Square foot	$1.002	
Storage Units	Square foot	$0.362	
Wastewater Treatment Plant			
Single Family Dwelling	Unit	$4,523.50	
Multiple Family Dwelling	Unit	$2,679.86	
Mobile Home Dwelling	Unit	$2,679.86	
Commercial Lodging Unit	Unit	$1,014.68	
Seasonal Employee Housing	Bed	$334.98	
Commercial	Square foot	$1.227	
Industrial	Square foot	$1.841	
Storage Units	Square foot	$0.666	
Public Meeting Facilities			
Single Family Dwelling	Unit	$946.500	
Multiple Family Dwelling	Unit	$1,027.000	
Mobile Home Dwelling	Unit	$980.500	
Commercial Lodging Unit	Unit	-	
Seasonal Employee Housing	Bed	-	
Commercial	Square foot	-	
Industrial	Square foot	-	
Storage Units	Square foot	-	

KING CITY MASTER FEE SCHEDULE
Effective 2/1/2020

Fee	Per Unit	Fee	Minimum
Impact Fees for Projects Vested after August 21, 2010 (continued)			
Aquatic Center Facilities			
Single Family Dwelling	Unit	$343.00	
Multiple Family Dwelling	Unit	$371.00	
Mobile Home Dwelling	Unit	$355.00	
Commercial Lodging Unit	Unit	-	
Seasonal Employee Housing	Bed	-	
Commercial	Square foot	-	
Industrial	Square foot	-	
Storage Units	Square foot	-	
Park and Open Space Acquisition			
Single Family Dwelling	Unit	$3,323.50	
Multiple Family Dwelling	Unit	$3,602.50	
Mobile Home Dwelling	Unit	$3,442.00	
Commercial Lodging Unit	Unit	-	
Seasonal Employee Housing	Bed	$450.31	
Commercial	Square foot	-	
Industrial	Square foot	-	
Storage Units	Square foot	-	
Total Impact Fees			
Single Family Dwelling	Unit	$18,874.16	
Multiple Family Dwelling	Unit	$13,421.67	
Mobile Home Dwelling	Unit	$12,464.81	
Commercial Lodging Unit	Unit	$4,177.69	
Seasonal Employee Housing	Bed	$886.66	
Commercial	Square foot	$7.72	
Industrial	Square foot	$5.93	
Storage Units	Square foot	$2.79	

KING CITY
CALIFORNIA

Item No. 9(F)

REPORT TO THE SUCCESSOR AGENCY TO THE FORMER CDA

DATE: **JANUARY 14, 2020**

TO: **HONORABLE CHAIR AND MEMBERS OF THE SUCCESSOR AGENCY**

FROM: **MIKE HOWARD, FINANCE DIRECTOR**

RE: **A RESOLUTION OF THE SUCCESSOR AGENCY TO THE FORMER KING CITY COMMUNITY DEVELOPMENT AGENCY APPROVING THE RECOGNIZED OBLIGATION PAYMENT SCHEDULE 20-21 FOR THE PERIOD OF JULY 1, 2020 THROUGH JUNE 30, 2021**

RECOMMENDATION:

It is recommended that the Successor Agency approve Resolution SA-2020-01 approving the ROPS 20-21, for the period of July 1, 2020 through June 30, 2021.

BACKGROUND:

Pursuant to Health and Safety Code § 34172 (a)(1), the King City Community Development Agency was dissolved on February 1, 2012. Consistent with the provisions of the Health and Safety Code, the City Council previously elected to serve in the capacity of the Successor Agency to the King City Community Development Agency, (the "Successor Agency"). In the past, Health and Safety Code § 34177 (1)(1), required the Successor Agency to prepare a Recognized Obligation Payment Schedule ("ROPS") before each six-month fiscal period, which corresponds to equal halves of a fiscal year (i.e., July through December and January through June). Current law now requires the preparation and approval or a ROPS for an entire Fiscal Year.

The ROPS is the basis for the Successor Agency's authority to make payment due for enforceable obligations. Subsequent to its approval by the Successor Agency, the ROPS must also be approved by the Oversight Board ("OS Board") to the Successor Agency and is reviewable by the County Auditor-Controller, the County Administrative Officer, the California Department of Finance and the California State Controller's Office.

DISCUSSION:

Successor Agency staff has prepared ROPS 20-21 for the period of July 1, 2020 through June 30, 2021, which consists of several spreadsheets that are appended to the attached Exhibit "SA" as Attachment '1'.

Pursuant to Health and Safety Code § 34177 (m), an Oversight Board-approved ROPS for the period of July 1, 2020 through June 30, 2021 must be submitted to the County Auditor-Controller, County Administrative Officer, the State Controller and the State Department of Finance not later than February 1, 2020.

Upon approval of the ROPS by the Oversight Board, and pursuant to Health and Safety Code § 34177 (l)(2), a copy of this staff report and the attached resolution will be submitted to the County Auditor-Controller, County Administrative Officer, the State Controller and the State Department of Finance within the prescribed timeframe.

Approval of the attached Resolution will authorize the Successor Agency Director, or designee, to:

1. Post the ROPS for the period of July 1, 2020 through June 30, 2021 on the City's website;

2. Transmit the ROPS for the period of July 1, 2020 through June 30, 2021 to the County Auditor-Controller, County Administrative Officer, the State Controller, and the State Department of Finance within the timeframe prescribed by the Health and Safety Code; and

3. Make ministerial revisions to the ROPS which may include, but is not limited to, restating the information included within the ROPS in any format that may be requested by the State Department of Finance, take such other actions and execute such other documents as are necessary to effectuate the intent of the Resolution, and to implement the ROPS for the period of July 1, 2020 through June 30, 2021 on behalf of the Successor Agency, including authorizing and causing such payments.

Environmental Review

The actions of this item have been reviewed with respect to applicability of the California Environmental Quality Act ("CEQA"), the State CEQA Guidelines (California Code of Regulations, Title 14, § 15000 *et seq.*, hereafter the "Guidelines"), and the City's environmental guidelines. The recommended action does not constitute a "project" for purposes of CEQA, as that term is defined by Guidelines § 15378, because this Resolution is an organizational or administrative activity that will not result in a direct or indirect physical change in the environment, per § 15378(b) (5) of the Guidelines.

COST ANALYSIS:

Pursuant to Health and Safety Code § 34177, the Successor Agency is legally required to continue to make payments due for enforceable obligations. The Successor Agency's approval of ROPS 20-21 will ensure that the Successor Agency has the authority to continue to pay its enforceable obligations. The recommended action does not, in itself, cause any new financial obligations

ALTERNATIVES:

The following alternatives are provided for Council consideration:

1. Approve Resolution SA-2020-01 approving ROPS 20-21, for the period of July 1, 2020 through June 30, 2021; or
2. Provide other direction to staff.

Exhibits:

1. Resolution No. SA-2020-01 with Attached "1" King City Successor Agency's ROPS 20-21 (July 1, 2020 through June 30, 2021)

Submitted by: _____
Mike Howard, Finance Director

Approved by: _____
Steven Adams, City Manager / Executive Director

RESOLUTION NO. SA-2020-01

A RESOLUTION OF THE SUCCESSOR AGENCY TO THE FORMER KING CITY COMMUNITY DEVELOPMENT AGENCY APPROVING THE RECOGNIZED OBLIGATION PAYMENT SCHEDULE 20-21 FOR THE PERIOD OF JULY 1, 2020 THROUGH JUNE 30, 2021

WHEREAS, pursuant to Health and Safety Code § 34172(a) (1), the King City Community Development Agency was dissolved February 1, 2012; and

WHEREAS, consistent with the provisions of the Health and Safety Code, the City Council previously elected to serve in the capacity of the Successor Agency to the King City Community Development Agency (the "Successor Agency"); and

WHEREAS, per Health and Safety Code **§** 34177 (1)(1), the Successor Agency is required to prepare a Recognized Obligation Payment Schedule ("ROPS") for the period July 1, 2020 through June 30, 2021; and

WHEREAS, the ROPS is the basis for the Successor Agency's authority to make payment due for enforceable obligations; and

WHEREAS, subsequent to its approval by the Successor Agency, the ROPS must also be approved by the Oversight Board ("OS Board") to the Successor Agency and is reviewable by the County Auditor-Controller, the County Administrative Officer, the California Department of Finance and the California State Controller's Office not later than February 1, 2020; and

WHEREAS, Agency staff has prepared the ROPS for the period of July 1, 2020 through June 30, 2021, which consists of several spreadsheets that are appended to this Resolution as Attachment "1"; and

WHEREAS, subsequent to the approval of this Resolution and approval by the OS Board the ROPS will be forwarded to the County Auditor-Controller, the County Administrative Officer, the California Department of Finance and the California State Controller's Office for their review; and

WHEREAS, this Resolution has been reviewed with respect to applicability of the California Environmental Quality Act ("CEQA"), the State CEQA Guidelines (California Code of Regulations, Title 14, §§ 15000 *et seq.*, hereafter the "Guidelines"), and the City's environmental guidelines; and

WHEREAS, the actions implemented by adoption of this Resolution are not a "project" for purposes of CEQA, as that term is defined by Guidelines § 15378, because the action is an organizational or administrative activity that will not result in a direct or indirect physical change in the environment, per § 15378(b) (5) of the Guidelines.

WHEREAS, all of the prerequisites with respect to the approval of this Resolution have been met.

NOW, THEREFORE, BE IT RESOLVED by the Successor Agency to the King City Community Development Agency, as follows:

Section 1. The foregoing recitals are true and correct and are a substantive part of this Resolution.

Section 2. The establishment of the Successor Agency's ROPS 20-21 covering the period of July 1, 2020 through June 30, 2021, which is attached hereto as Attachment '1', is approved.

Section 3. The Successor Agency Director, or designee, is hereby authorized to: i) post ROPS 20-21 on the City's website; ii) transmit ROPS 20-21 to the County Auditor-Controller, the County Administrative Officer, the State Controller and the State Department of Finance for their review within the timeframe prescribed by the Health and Safety Code; and iii) make ministerial revisions to ROPS 20-21 which may include, but is not limited to restating the information included within ROPS 20-21 in any format that may be requested by the State Department of Finance, take such other actions and execute such other documents as are necessary to effectuate the intent of this Resolution, and to implement ROPS 20-21 on behalf of the Successor Agency, including authorizing and causing such payments.

Section 4. This Resolution shall take effect upon the date of its adoption.

PASSED AND ADOPTED by the Successor Agency at a regular meeting held on the 14th day of January 2020 by the following vote:

AYES: **SUCCESSOR AGENCY MEMBERS:**

NOES: **SUCCESSOR AGENCY MEMBERS:**

ABSENT: **SUCCESSOR AGENCY MEMBERS:**

ABSTAIN: **SUCCESSOR AGENCY MEMBERS:**

_____
Michael LeBarre, The Honorable Chair

ATTEST:

_____
Steven Adams, Successor Agency Secretary

ATTACHMENT '1'

SUCCESSOR AGENCY TO THE KING CITY COMMUNITY DEVELOPMENT AGENCY RECOGNIZED OBLIGATION PAYMENT SCHEDULE 20-21 (July 1, 2020 through June 30, 2021)

Recognized Obligation Payment Schedule (ROPS 20-21) - Summary
Filed for the July 1, 2020 through June 30, 2021 Period

Successor Agency: King
County: Monterey

Current Period Requested Funding for Enforceable Obligations (ROPS Detail)	20-21A Total (July - December)	20-21B Total (January - June)	ROPS 20-21 Total
A Enforceable Obligations Funded as Follows (B+C+D)	$ -	$ -	$ -
B Bond Proceeds	-	-	-
C Reserve Balance	-	-	-
D Other Funds	-	-	-
E Redevelopment Property Tax Trust Fund (RPTTF) (F+G)	$ 773,145	$ 120,958	$ 894,103
F RPTTF	648,145	120,958	769,103
G Administrative RPTTF	125,000	-	125,000
H Current Period Enforceable Obligations (A+E)	$ 773,145	$ 120,958	$ 894,103

Certification of Oversight Board Chairman:

Pursuant to Section 34177 (o) of the Health and Safety code, I hereby certify that the above is a true and accurate Recognized Obligation Payment Schedule for the above named successor agency.

Name Title

/s/

Signature Date

King
Recognized Obligation Payment Schedule (ROPS 20-21) - ROPS Detail
July 1, 2020 through June 30, 2021

A	B	C	D	E	F	G	H	I	J	K	L	M	N	O	P	Q	R	S	T	U	V	W
											ROPS 20-21A (Jul - Dec)						ROPS 20-21B (Jan - Jun)					
											Fund Sources						Fund Sources					
Item #	Project Name	Obligation Type	Agreement Execution Date	Agreement Termination Date	Payee	Description	Project Area	Total Outstanding Obligation	Retired	ROPS 20-21 Total	Bond Proceeds	Reserve Balance	Other Funds	RPTTF	Admin RPTTF	20-21A Total	Bond Proceeds	Reserve Balance	Other Funds	RPTTF	Admin RPTTF	20-21B Total
								$11,146,086		$894,103	$-	$-	$-	$648,145	$125,000	$773,145	$-	$-	$-	$120,958	$-	$120,958
12	Successor Agency Admin.	Admin Costs	02/02/2012	08/01/2034	City of King	Successor Agency Administration	King City	600,000	N	$125,000	-	-	-	-	125,000	$125,000	-	-	-	-	-	$-
13	Securities Servicing	Fees	11/11/1998	08/01/2034	US Bank	Annual Securities Servicing on TABs	King City	50,000	N	$4,135	-	-	-	4,135	-	$4,135	-	-	-	-	-	$-
14	Continuing Disclosure	Fees	01/02/2014	08/01/2034	Pending	Annual Continuing Disclosure on TABs	King City	53,000	N	$3,000	-	-	-	-	-	$-	-	-	-	3,000	-	$3,000
16	Property Maintenance	Property Maintenance	01/02/2014	08/01/2034	Various Vendors	Maintain property until transfered per LRPMP	King City	5,000	N	$2,500	-	-	-	2,500	-	$2,500	-	-	-	-	-	$-
19	Downtown Addition Housing Project	Miscellaneous	06/14/2011	08/01/2034	Smith-Monterey KC, LLC	Land acquisition and construction 54 Low income housing units	King City	-	Y	$-	-	-	-	-	-	$-	-	-	-	-	-	$-
21	2016 TARB (Former 1998 TAB)	Refunding Bonds Issued After 6/27/12	09/01/2016	09/01/2024	US Bank	TABs for Refunding Prior TABs	King RDA	2,490,000	N	$330,524	-	-	-	301,997	-	$301,997	-	-	-	28,527	-	$28,527
22	2016 A&B TARB (Former 2011 TAB)	Refunding Bonds Issued After 6/27/12	02/01/2017	08/01/2034	US Bank	TABs for Refunding Prior TABs		7,948,086	N	$428,944	-	-	-	339,513	-	$339,513	-	-	-	89,431	-	$89,431

King
Recognized Obligation Payment Schedule (ROPS 20-21) - Report of Cash Balances
July 1, 2017 through June 30, 2018
(Report Amounts in Whole Dollars)

Pursuant to Health and Safety Code section 34177 (l), Redevelopment Property Tax Trust Fund (RPTTF) may be listed as a source of payment on the ROPS, but only to the extent no other funding source is available or when payment from property tax revenues is required by an enforceable obligation.

A	B	C	D	E	F	G	H
	ROPS 17-18 Cash Balances (07/01/17 - 06/30/18)	**Fund Sources**					**Comments**
		Bond Proceeds		**Reserve Balance**	**Other Funds**	**RPTTF**	
		Bonds issued on or before 12/31/10	Bonds issued on or after 01/01/11	Prior ROPS RPTTF and Reserve Balances retained for future period(s)	Rent, grants, interest, etc.	Non-Admin and Admin	
1	**Beginning Available Cash Balance (Actual 07/01/17)** RPTTF amount should exclude "A" period distribution amount.		6,230,950			1,594,273	See attached Cash Reconciliation
2	**Revenue/Income (Actual 06/30/18)** RPTTF amount should tie to the ROPS 17-18 total distribution from the County Auditor-Controller		1,198,165		3,600	930,270	
3	**Expenditures for ROPS 17-18 Enforceable Obligations (Actual 06/30/18)**		1,190,238			1,721,088	
4	**Retention of Available Cash Balance (Actual 06/30/18)** RPTTF amount retained should only include the amounts distributed as reserve for future period(s)						
5	**ROPS 17-18 RPTTF Prior Period Adjustment** RPTTF amount should tie to the Agency's ROPS 17-18 PPA form submitted to the CAC		No entry required			82,384	
6	**Ending Actual Available Cash Balance (06/30/18)** C to F = (1 + 2 - 3 - 4), G = (1 + 2 - 3 - 4 - 5)	$-	$6,238,877	$-	$3,600	$721,071	

King
Recognized Obligation Payment Schedule (ROPS 20-21) - Notes
July 1, 2020 through June 30, 2021

Item #	Notes/Comments
12	The former CDA still has one remaining property to dispose of and the agency continues working on the build-out of the industrial park. Therefore, admin cost are continued to be requested.
13	
14	
16	Remaining vacant lot needs to be maintained. As with previous ROPS the agency uses Public Works staff to do the weed abatement as well as trash removal.
19	
21	
22	

KING CITY
CALIFORNIA

Item No. 9(G)

REPORT TO THE CITY COUNCIL

DATE: JANUARY 14, 2020

TO: HONORABLE MAYOR AND MEMBERS OF THE CITY COUNCIL

FROM: STEVEN ADAMS, CITY MANAGER

BY: ANDREA MARBLE, HUMAN RESOURCES MANAGER

RE: CONSIDERATION OF UPDATE TO FY 2019-20 JOB CLASSIFICATION PLAN

RECOMMENDATION:

It is recommended the City Council adopt a Resolution approving an update to the FY 2019-20 Job Classification Plan to implement changes to hourly pay rates for some of the City's part-time positions.

BACKGROUND:

The City maintains a Job Classification Plan that sets forth all existing job classifications and salary ranges. It is also a requirement of CalPERS that the City Council adopt on an annual basis the City's Salary Classification Plan.

On January 1, 2020, State law increased the minimum wage to $13 per hour for employers with 26 or more employees. As a result, it is necessary to make adjustments to some of the City's part-time hourly pay rates. A Resolution and updated Job Classification Plan is attached for Council consideration.

DISCUSSION:

Due to an increase in the minimum wage, it is necessary to increase the pay rate for some of the City's aquatics and recreation positions that are currently set at the 2019 minimum wage. An 8.3333% increase is proposed for 3 positions - Aquatic Aide, Pool Cashier and Recreation Aide - with base wages that would fall below the new State minimum wage law. In addition, a 3% increase is proposed for pay rates of the other aquatics and recreation positions in order to avoid compaction between pay for supervisors and subordinates and to maintain rates

that are competitive with other cities in South Monterey County. Lastly, pay rates for other positions are proposed to be increased in order to maintain an appropriate level above minimum wage in order to recruit and maintain staff with the necessary skills and experience.

The part-time positions that are recommended for a pay rate increase include the following:

- Pool Manager
- Assistant Pool Manager
- Aquatic Aide
- Pool Cashier
- Lifeguard
- Recreation Aide
- Summer Day Camp Coordinator

COST ANALYSIS:

The estimated annual cost from this increase will be approximately $9,000 to $11,300, depending on the mix of employees. The total estimated cost includes the wages and statutory benefits. There will be a slight increase to the FY 19-20 budget for seasonal employees hired in June. The bulk of the increase will be adjusted in the FY 20-21 budget.

ENVIRONMENTAL REVIEW:

The Job Classification Plan is not a "project" for the purposes of the California Environmental Quality Act (CEQA) as it does not have the potential for resulting in either a direct physical change to the environment or a reasonably foreseeable indirect physical change in the environment. No further action is required under CEQA for City Council action.

ALTERNATIVES:

The following alternatives have been identified for City Council consideration:

1. Approve staff's recommendation;
2. Approve increases only for those positions that currently fall below the new minimum wage;
3. Make other changes to the Job Classification Plan; or
4. Provide staff other direction.

Prepared by:

Andrea Marble, Human Resources Manager

Approved by:

Steven Adams, City Manager

RESOLUTION NO. _____

RESOLUTION OF THE CITY COUNCIL OF THE CITY OF KING AMENDING THE CLASSIFICATION PLAN FOR FY 2019-20

WHEREAS, the City of King maintains a Classification Plan that sets forth all existing job classifications and salary steps; and

WHEREAS, adoption of an annual Classification Plan is required by CalPERS; and

WHEREAS, the City Council desires to update the Classification Plan to accurately reflect all existing classifications and to increase pay rates for certain part-time positions to comply with State of California minimum wage regulations; and

NOW, THEREFORE, BE IT HEREBY RESOLVED that the City Council of the City of King approves amendments to the FY 2019-20 Classification Plan effective on January 14, 2020 as set forth in Exhibit A.

This resolution was passed and adopted this **14th** day of **January 2020** by the following vote:

AYES, Council Members:
NAYS, Council Members:
ABSENT, Council Members:
ABSTAIN, Council Members:

APPROVED:

_____
Mike LeBarre, Mayor

ATTEST:

_____
Steven Adams, City Clerk

APPROVED AS TO FORM:

_____
Roy Santos, City Attorney

EXHIBIT A

CITY OF KING
JOB CLASSIFICATION PLAN
FISCAL YEAR 2019-20

REVISED Jan 14, 2020

CLASSIFICATION	FIVE-PERCENT STEP ADVANCEMENT					
	STEP A	STEP B	STEP C	STEP D	STEP E	STEP F
EXECUTIVE MANAGEMENT STAFF						
CITY MANAGER	$169,319.80 ANNUAL (SALARY INDEPENDENT OF STEP SCHEDULE)					
CHIEF OF POLICE	$123,164.46	$129,322.69	$135,788.82	$142,578.26	$149,707.18	$157,192.54
MANAGEMENT STAFF						
POLICE CAPTAIN	$109,458.30	$115,219.65	$121,283.40	$127,667.40	$134,387.40	$141,460.20
HUMAN RESOURCES MANAGER	$73,035.48	$76,687.25	$80,521.61	$84,547.69	$88,775.08	$93,213.83
RECREATION COORDINATOR	$61,017.20	$64,067.03	$67,270.33	$70,633.28	$74,165.15	$77,874.18
SUPERVISORY STAFF						
POLICE SERGEANT	$85,059.00	$89,313.00	$93,779.00	$98,466.00	$103,391.00	$108,561.00
POLICE CLERK SUPERVISOR	$42,143.09	$44,250.65	$46,463.70	$48,786.89	$51,227.16	$53,789.16
PUBLIC WORKS SUPERVISOR	$59,031.36	$61,982.93	$65,082.07	$68,336.18	$71,752.99	$75,340.64
BUILDING/MAINTENANCE STAFF						
MAINTENANCE WORKER I	$33,057.85	$34,710.99	$36,447.58	$38,269.95	$40,183.92	$42,194.09
MAINTENANCE WORKER II	$38,279.23	$40,193.19	$42,203.38	$44,314.41	$46,530.95	$48,857.61
MAINTENANCE WORKER I/ WASTEWATER SERVICES	$36,363.64	$38,182.09	$40,092.34	$42,096.95	$44,202.31	$46,413.51
MAINTENANCE WORKER II/ WASTEWATER SERVICES	$42,106.40	$44,212.50	$46,423.71	$48,745.85	$51,184.03	$53,743.37
SENIOR MAINTENANCE WORKER	$44,286.59	$46,501.96	$48,827.47	$51,268.89	$53,833.21	$56,525.05
STREET SWEEPER OPERATOR	$38,279.23	$40,193.19	$42,203.38	$44,314.41	$46,530.95	$48,857.61
PUBLIC SAFETY STAFF						
POLICE OFFICER	$63,471.00	$66,645.00	$69,978.00	$73,477.00	$77,151.00	$81,009.00
POLICE OFFICER RECRUIT	$51,381.00					
CODE ENFORCEMENT OFFICER	$47,937.67	$50,334.55	$52,851.53	$55,494.79	$58,270.52	$61,184.91
FIRE CHIEF	$7,753.43					
FIRE CHIEF 1ST ASSISTANT	$3,800.70					
FIRE CHIEF 2ND ASSISTANT	$3,800.70					
FIRE CHIEF ENGINEER	$3,800.70					
FIRE DEPARTMENT SECRETARY/TREASURER	$2,660.49					
FIRE ENGINEER	$2,837.86					
VOLUNTEER FIREFIGHTER	$14.00					
PROFESSIONAL/SUPPPORT STAFF						
SENIOR ACCOUNTANT	$50,589.62	$53,120.26	$55,776.27	$59,566.18	$61,494.85	$64,569.59
ACCOUNTANT	$48,180.59	$50,590.72	$53,120.26	$55,777.21	$58,566.53	$61,494.85
ACCOUNTING TECHNICIAN	$40,151.46	$42,159.32	$44,268.04	$46,482.25	$48,806.60	$51,248.03
EXECUTIVE ASSISTANT TO THE CITY MANAGER/DEPUTY CITY CLERI	$44,562.68	$46,790.81	$49,130.35	$51,586.87	$54,166.22	$56,874.53
EXECUTIVE ASSISTANT TO THE POLICE CHIEF	$44,562.68	$46,790.81	$49,130.35	$51,586.87	$54,166.22	$56,874.53
ADMINISTRATIVE ASSISTANT	$40,151.46	$42,159.32	$44,268.04	$46,482.25	$48,806.60	$51,248.03
ASSISTANT PLANNER	$69,557.60	$73,036.59	$76,689.46	$80,524.33	$84,551.65	$88,779.52
CUSTOMER SERVICE ASSISTANT	$40,151.46	$42,159.32	$44,268.04	$46,482.25	$48,806.60	$51,248.03
POLICE CLERK I	$32,475.90	$34,100.04	$35,805.34	$37,596.42	$39,476.76	$41,451.00
SEASONAL/PART-TIME (HOURLY RATE)						
POLICE CLERK I	$15.61	$16.39	$17.21	$18.07	$18.97	$19.92
ANIMAL CONTROL OFFICER	$21.58	$22.66	$23.79	$24.98	$26.23	$27.54
POOL MANAGER	$16.45	$17.27	$18.14	$19.04	$19.99	$20.99
ASSISTANT POOL MANAGER	$14.96	$15.70	$16.49	$17.31	$18.18	$19.09
AQUATIC AIDE	$13.00	$13.65	$14.33	$15.05	$15.80	$16.59
POOL CASHIER	$13.00	$13.65	$14.33	$15.05	$15.80	$16.59
LIFEGUARD	$13.60	$14.28	$14.99	$15.74	$16.53	$17.35
RECREATION AIDE	$13.00	$13.65	$14.33	$15.05	$15.80	$16.59
SUMMER DAYCAMP COORDINATOR	$15.45	$16.22	$17.03	$17.89	$18.78	$19.72
CUSTOMER SERVICE ASSISTANT	$13.91	$14.61	$15.34	$16.10	$16.91	$17.75
MAINTENANCE AIDE	$13.91	$14.61	$15.34	$16.10	$16.91	$17.75
CITY COUNCIL & MAYOR						
MAYOR	$5,400.00					
CITY COUNCIL	$4,200.00					

KING CITY
CALIFORNIA

Item No. 10(A)

REPORT TO THE CITY COUNCIL

DATE: **JANUARY 14, 2020**

TO: **MAYOR AND MEMBERS OF THE CITY COUNCIL**

FROM: **DOREEN LIBERTO, AICP, COMMUNITY DEVELOPMENT DIRECTOR**

RE: CONSIDERATION OF AN ORDINANCE OF THE CITY COUNCIL OF THE CITY OF KING AMENDING CHAPTERS 17.04, 17.12, 17.14, 17.16, 17.18, OF TITLE 17 OF THE KING CITY MUNICIPAL CODE PERTAINING TO FENCES, WALLS AND HEDGES

RECOMMENDATION:

It is recommended City Council open the public hearing, consider public testimony, introduce and conduct the first reading of an Ordinance of the City Council of the City of King Amending Chapters 17.04, 17.12, 17.14, 17.16, 17.18, of Title 17 of the King City Municipal Code pertaining to fences, walls and hedges, by title only, and set the second reading and adoption for the next regularly scheduled Council meeting of January 28, 2020.

BACKGROUND:

In response to recent long-range planning efforts and code enforcement actions, staff is recommending an ordinance involving fences. It will establish new standards for fences, hedges, walls, atriums, and courtyards to increase safety in the public right-of-way, improve streetscape aesthetics; and reduce non-conforming fences. At their December 17, 2019 meeting, the Planning Commission unanimously voted to recommend the Council adopt the proposed code update.

DISCUSSION:

The City is working to create safer streets for pedestrians, bicyclists, and motorists. This code update introduces "vision clearance areas" at street corners, driveways and alleys. The purpose of a vision clearance area is to limit the height of fences in locations necessary to reduce blind spots along roads and to maximize visibility.

The Citizen Advisory Code Enforcement Committee also met in July of 2019 and recommended that the standards for fence height requirements be amended. The purpose is to allow slightly taller fences in single-family front yards to reduce the number of non-conforming fences so the City can better target enforcement on those fences with the most serious violations. The current height limit of 3 feet is also problematic because most prefabricated fences come in 4 feet heights. In addition, the update increases consistency among residential fence standard and establishes a list of prohibited fencing materials.

The proposed code update is detailed below:

- Amends Chapter 17.04 to add new definitions, including definitions for fences located in specific locations (i.e. "side yard fence") and adds a definition for a "Vision Clearance Area," which restricts fence heights to three (3') feet within a certain distance from street corners and driveways/alleys.

- Amends Chapters 17.12, 17.14, 17.16, 17.18 to create more consistent fence standards across all residential zones and establish a maximum height of seven (7') feet in all residential zones.

- Amends Chapter 17.48 to establish that a "Fence Permit" will be required for fences over (3') feet up to a maximum of four feet (4') located in the front yard setback area, establish a list of prohibited fencing materials, and establish standards for decorative features (e.g., trellises and masonry columns), retaining walls, berms, and mounds.

ENVIRONMENTAL REVIEW:

The Ordinance is exempt from the California Environmental Quality Act ("CEQA") as it can be seen with certainty that there are no possibilities that the Ordinance will have significant effects on the environment pursuant to CEQA Guidelines section 15061(b)(3), as well as it is exempt because it consists of regulations and restrictions on activities to assure the maintenance, restoration, or enhancement of natural resources and the environment by prohibiting environmentally destructive components of unregulated fences/walls pursuant to CEQA Guidelines sections 15307 and 15308.

COST ANALYSIS:

There are no costs associated with this action.

ALTERNATIVES:

The following recommendations are provided for City Council consideration:

1. Approve staff's recommendations and introduce the Ordinance;
2. Direct staff to modify the Ordinance;
3. Do not adopt the Ordinance;
4. Request additional information; or
5. Provide staff other direction.

Exhibits:

Exhibit 1: Ordinance No. 2020-781

Submitted by: _____
Doreen Liberto, AICP, Community Development Director

Approved by: _____
Steven Adams, City Manager

ORDINANCE NO. 2020-781

AN ORDINANCE OF THE CITY COUNCIL OF THE CITY OF KING AMENDING CHAPTERS 17.04, 17.12, 17.14, 17.16, 17.18 , OF TITLE 17 OF THE KING CITY MUNICIPAL CODE PERTAINING TO FENCES, WALLS AND HEDGES

WHEREAS, pursuant to Article XI, Section 7, of the California Constitution, the City of King ("City") may adopt and enforce ordinances and regulations not in conflict with general laws to protect and promote the public health, safety, and welfare of its citizens; and

WHEREAS, the City has seen an increase in code enforcement complaints for fences being built higher than thirty-six (36") in height; and

WHEREAS, on **July 24, 2019**, the Citizen Advisory Code Enforcement Committee recommended that the standards for fence height requirements be amended; and

WHEREAS, current industry standards of prefabricated fence materials are more frequently being built to forty-eight (48") inches in height; and

WHEREAS, a city survey by the Building and Safety Department was conducted in various zones within the city and identified over twenty (20) fences in front yard areas that are forty-eight (48") inches in height; and

WHEREAS, staff researched other nearby cities that have also incorporated a forty-eight (48") inches height for front yard fencing; and

WHEREAS, amending Title 17 Zoning Chapters 17.04, 17.12, 17.14, 17.16, and 17.18 will provide design standards and allow front yard fences up to thirty-six (36") inches in height outright, with the ability to implement fences up to forty-eight (48") inches in height with a Fence Permit; and

WHEREAS, on **December 17, 2019**, the City of King Planning Commission ("Commission") conducted a public hearing to consider the proposed ordinance, and after considering public testimony, the staff report and all submitted evidence to the support the ordinance, the Commission recommended the City Council ("Council") approve the proposed ordinance; and

WHEREAS, the proposed ordinance is consistent with the General Plan and any applicable Specific Plan(s); and

WHEREAS, the Council finds that this ordinance is necessary for the preservation of the public peace, health and safety; and

WHEREAS, in accordance with the California Environmental Quality Act ("CEQA"), and pursuant to CEQA Guideline, sections 15378 and 15061(b)(3), this activity is not a "project" subject to CEQA as it can be seen with certainty that there is no possibility that an activity may have a significant effect on the environment.

NOW THEREFORE, the City Council of the City of King does hereby ordain as follows:

SECTION 1. The above recitals are incorporated are hereby by reference.

SECTION 2. An environmental determination the Ordinance is exempt from the California Environmental Quality Act ("CEQA") as it can be seen with certainty that there is no possibility that it will have a significant effect on the environment pursuant to CEQA Guidelines section 15061(b)(3), as well as it is also exempt because it consists of regulations and restrictions on activities to assure the maintenance, restoration, or enhancement of natural resources and the environment by prohibiting environmentally destructive components of unregulated fences/walls, pursuant to CEQA Guidelines sections 15307 and 15308.

SECTION 3. Chapter 17.04, of Title 17, of the King City Municipal Code and the Sections specifically identified below are amended to read as follows:

Chapter 17.04
DEFINITIONS

Section 17.04.210 Fence.
"Fence" means any structural device forming a physical barrier by means of hedge, wood, mesh, metal, chain, brick, stake, plastic or other similar materials.

"Front yard fence" means any structure device forming a physical barrier by means of hedge, wood, mesh, metal, chain, brick, stake, plastic or other similar material located along the front yard property line or within the front yard setback area.

"Atrium or courtyard walls" mean an outdoor area attached to a dwelling, enclosed on all sides by walls and open to the sky.

"Side yard fence" means any structure device forming a physical barrier by means of hedge, wood, mesh, metal, chain, brick, stake, plastic or other similar material located behind the required front yard setback.

"Street side yard fence" means any structure device forming a physical barrier by means of hedge, wood, mesh, metal, chain, brick, stake, plastic or other similar material located behind the required street side yard setback area.

"Rear yard fence" means any structure device forming a physical barrier by means of hedge, wood, mesh, metal, chain, brick, stake, plastic or other similar material located along the rear yard property line.

"Vision Clearance Area" means a triangular area measured 30 feet from the street corner edge of curb, as shown in Diagram 1; and

A triangular area measured 15 feet from the outer edge of curb on both sides of an alley or residential/commercial driveway, as shown in Diagram 1.

DIAGRAM 1: DRIVEWAY VISION CLEARANCE AREA

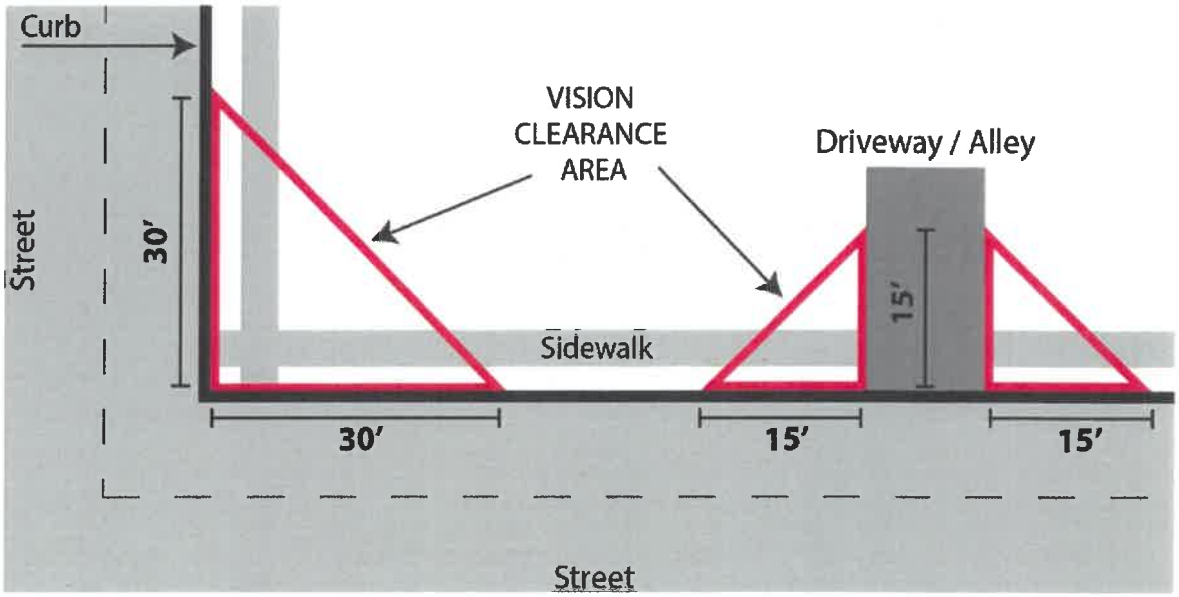

"Fence Permit" means a discretionary permit obtained from the Community Development Department, subject to City Engineer review for vision clearance area. Fence Permits may be appealed to the Planning Commission.

SECTION 4. Chapter 17.12, of Title 17, of the King City Municipal Code and the Sections specifically identified below are amended to read as follows:

Chapter 17.12
(R-1 Single Family Residential District)
FENCES – WALLS

Section 17.12.090 Fences-Walls.

~~"Fences and walls are permitted but not required. Such fences and walls shall not exceed seven feet in height, and where the same are located in the required front yard or side yard abutting the street, the same shall not exceed three feet in height."~~

Fence, Wall and Hedge Height Standards:

(1) Located on front or street side property line, within front yard setback, or within street side yard setback:

a. Without Fence Permit: Maximum of three (3') feet in height above the existing elevation of the surface of the ground at such point.

b. With Fence Permit: Maximum of four (4') feet in height above the existing elevation of the surface of the ground at such point.

(2) Located within the Vision Clearance Area:

a. Maximum of three (3') feet in height.

(3) Located within three-feet of a fire hydrant or utility poles located in the right-of-way:

a. Maximum of three (3') feet in height.

(4) Located within a rear or interior side yard:

a. Maximum of seven (7') feet in height.

(5) The minimum spacing for concrete or masonry columns is eight (8') feet on center. The height of concrete or masonry columns between fence panels may extend one (1') foot above the allowable fence height. Columns exceeding three (3') feet in height are prohibited within the Vision Clearance Area.

SECTION 5. Chapter 17.14, of Title 17, of the King City Municipal Code and the Sections specifically identified below are amended to read as follows:

Chapter 17.14
(R-2 Medium Family Residential District)
FENCES – WALLS

Section 17.14.090 Fences—Walls.
~~"Fences and walls are permitted but not required. Such fences and walls shall not exceed seven feet in height, and where the same are located in the required front yard or side yard abutting the street, the same shall not exceed three feet in height.~~

Fence, Wall and Hedge Height Standards:

(1) Located on front or street side property line, within front yard setback, or within street side yard setback:

a. Without Fence Permit: Maximum of three (3') feet in height above the existing elevation of the surface of the ground at such point.
b. With Fence Permit: Maximum of four (4') feet in height above the existing elevation of the surface of the ground at such point.

(2) Located within the Vision Clearance Area:

a. Maximum of three (3') feet in height.

(3) Located within three-feet of a fire hydrant or utility poles located in the right-of-way:

a. Maximum of three (3') feet in height.

(4) Located within a rear or interior side yard:

a. Maximum of seven (7') feet in height.

(5) The minimum spacing for concrete or masonry columns is eight (8') feet on center. The height of concrete or masonry columns between fence panels may extend one (1') foot above the allowable fence height. Columns exceeding three (3') feet in height are prohibited within the Vision Clearance Area.

SECTION 6. Chapter 17.16, of Title 17, of the King City Municipal Code and the Sections specifically identified below are amended to read as follows:

Chapter 17.16
(R-3 Medium High Family Residential District)
FENCES – WALLS

Section 17.16.090 Fences—Walls.

~~Fences and walls are permitted but not required. Such fences and walls shall not exceed seven feet in height, and where the same are located in the required front yard or side yard abutting the street, the same shall not exceed three feet in height. In developments of ten units or more on interior lots the fence height may be increased to a maximum height of seven feet under the following conditions:~~

(1) ~~The solid portion of the fence cannot exceed three feet in height above grade with the exception of concrete or masonry columns, which may extend up to six feet above grade with a maximum width of thirty inches.~~
(2) ~~The minimum spacing for concrete or masonry columns is eight feet on center.~~
(3) ~~The upper four feet of the fencing supported between the concrete or masonry columns is to be of open construction so as to permit view through the fencing.~~
(4) ~~Architectural review approval required for fences over three feet high in the front yard setback.~~
(5) ~~Fencing over three feet in height not permitted in front or side yard setbacks on corner lots.~~

Fence, Wall and Hedge Height Standards:

(1) Located on front or street side property line, within front yard setback, or within street side yard setback:

a. Without Fence Permit: Maximum of three (3') feet in height above the existing elevation of the surface of the ground at such point.
b. With Fence Permit: Maximum of four (4') feet in height above the existing elevation of the surface of the ground at such point.

(2) Located within the Vision Clearance Area:
a. Maximum of three (3') feet in height.

(3) Located within three-feet of a fire hydrant or utility poles located in the right-of-way:

a. Maximum of three (3') feet in height.

(4) Located within a rear or interior side yard:

a. Maximum of seven (7') feet in height. The solid portion of the fence cannot exceed three (3') feet in height above existing grade with the exception of concrete or masonry columns, which may extend up to six (6') feet above existing grade with a maximum width of thirty (30") inches.

(5) The minimum spacing for concrete or masonry columns is eight (8') feet on center. The height of concrete or masonry columns between fence panels may extend one (1') foot above the allowable fence height. Columns exceeding three (3') feet in height are prohibited within the Vision Clearance Area.

SECTION 7. Chapter 17.18, of Title 17, of the King City Municipal Code and the Sections specifically identified below are amended to read as follows:

Chapter 17.18
(R-4 High Density Residential & Professional Offices District)
FENCES – WALLS

Section 17.18.090 Fences—Walls.
~~"Fences and walls are permitted but not required. Such fences and walls shall not exceed six feet in height, and where the same are located in the required front yard or side yard abutting the street, the same shall not exceed three feet in height."~~

Fence, Wall and Hedge Height Standards:

(1) Located on front or street side property line, within front yard setback, or within street side yard setback:

a. Without Fence Permit: Maximum of three (3') feet in height above the existing elevation of the surface of the ground at such point.

b. With Fence Permit: Maximum of four (4') feet in height above the existing elevation of the surface of the ground at such point.

(2) Located within the Vision Clearance Area:

a. Maximum of three (3') feet in height.

(3) Located within three-feet of a fire hydrant or utility poles located in the right-of-way:

a. Maximum of three (3') feet in height.

(4) Located within a rear or interior side yard:

a. Maximum of seven (7') feet in height. The solid portion of the fence cannot exceed three (3') feet in height above existing grade with the exception of concrete or masonry columns, which may extend up to six (6') feet above existing grade with a maximum width of thirty (30") inches.

(5) The minimum spacing for concrete or masonry columns is eight (8') feet on center. The height of concrete or masonry columns between fence panels may extend one (1') foot above the allowable fence height. Columns exceeding three (3') feet in height are prohibited within the Vision Clearance Area.

SECTION 8. Chapter 17.18, of Title 17, of the King City Municipal Code and the Sections specifically identified below are amended to read as follows:

Chapter 17.48
(Uses – Conditions and Exemptions)
FENCES – WALLS

Section 17.48.100 Fences—Walls.

"Fences, hedges and walls may be erected in any district subject to the following conditions:

~~(a) Fences, hedges and walls shall not exceed six-feet in height from original grade on the lot or within all rear and side property lines on interior lot lines, and on or to the rear of all front yard setback lines.~~

~~(b) No fence, hedge or wall over thirty-six inches in height shall be erected in any required front yard, or in the required side yard on the street side of either a corner lot or on a lot, the rear line of which abuts the side line of an adjoining lot.~~

~~(c) A six-foot fence, hedge or wall may be located not closer than five-feet from the side property line on the street side of any corner lot.~~

(d) Fences or structures exceeding six-feet in height to enclose commercial and industrial areas, tennis courts or similar areas, when such fences enclose the rear half of a lot, may be erected subject to the obtaining of a conditional use permit ~~therefor~~.

(e) Prohibited Materials. Barbed wire, razor wire, wire mesh, electrified fences, or similar fence shall not be installed within the city, except for permitted uses in heavy commercial or industrial zones. Chain link fences are prohibited within the Historic Downtown Corridor.

(f) Retaining Walls. Where fences, hedges and walls are located on retaining walls, the height of the retaining wall shall be considered as part of the overall height of the fence or wall.

(g) Berms and Mounds. Where fences, hedges and walls are located on a berm or mound, the height of the fence shall include the berm or mound directly beneath the fence and above existing grade in the overall height measurement.

(h) Decorative Entry Feature. A decorative arch, gate, trellis or other entry feature located along a street frontage may exceed the height limit as long as it is outside the Vision Clearance Area. Decorative features shall be limited to a maximum of eight (8') feet in height and six (6') feet in width. No portion of the feature itself shall have a width exceeding eighteen (18") inches. Such features within required setbacks shall not be constructed of heavy materials such as masonry or metal. Only one decorative feature is permitted per street frontage. See Diagram 2.

Diagram 2
Decorative Entry Feature

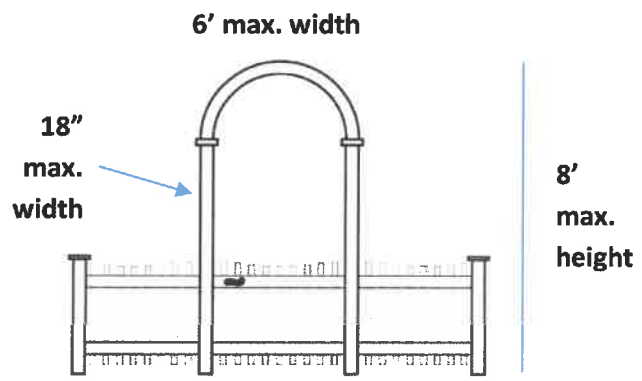

SECTION 9: EFFECTIVE DATE.
This Ordinance shall take effect and be in full force and effect from and after thirty (30) calendar days after its final passage and adoption. Within fifteen (15) calendar days after its adoption, the Ordinance, or a summary of the Ordinance, shall be published once in a newspaper of general circulation.

I HEREBY CERTIFY that the foregoing Ordinance was introduced by the City Council after waiving reading, except by Title, at a regular meeting thereof held on the _____ day of _____ 2020, and adopted the Ordinance after the second reading at a regular meeting held on the ____ day of _____ 2020, by the following roll call vote:

AYES: _____

NOES: _____

ABSTAIN: _____

ABSENT: _____

ATTEST

_____
STEVEN ADAMS, City Clerk

CITY OF KING

By: _____
MIKE LEBARRE, Mayor

APPROVED AS TO FORM:

By: _____
ROY C. SANTOS, City Attorney
Aleshire & Wynder, LLP

I, _____, City Clerk of the City of King, California, DO HEREBY CERTIFY that the foregoing is a true and accurate copy of the Ordinance passed and adopted by the City Council of the City of King on the date and by the vote indicated herein.

KING CITY
CALIFORNIA

Item No. 10(B)

REPORT TO THE CITY COUNCIL

DATE: **JANUARY 14, 2020**

TO: **MAYOR AND MEMBERS OF THE CITY COUNCIL**

FROM: **DOREEN LIBERTO, AICP, COMMUNITY DEVELOPMENT DIRECTOR**

RE: **CONSIDERATION OF THE CITY OF KING AMENDING TITLE 17, CHAPTER 17.26, SECTION 17.26.050 OF THE KING CITY MUNICIPAL CODE ALLOWING FOUR (4) STORIES AND FIFTY (50') FEET FOR HOTELS AND MOTELS IN THE HIGHWAY SERVICE DISTRICT, AMENDING CHAPTER 17.48 SECTION 17.48.070 AND CHAPTER 17.04 SECTION 17.04.240 TO CONSOLIDATE HEIGHT EXCEPTIONS AND BUILDING HEIGHT DEFINITION, AND AMENDING CHAPTER 17.04, SECTIONS 17.04.260 AND 17.04.350 TO CONSOLIDATE HOTEL/MOTEL DEFINITIONS**

RECOMMENDATION:

It is recommended City Council open the public hearing, consider public testimony, introduce and conduct the first reading of an Ordinance amending Title 17, Chapter 17.26, Section 17.26.050 of the King City Municipal Code allowing four (4) stories and fifty (50') feet for hotels and motels in the highway service district, amending chapter 17.48 section 17.48.070 and chapter 17.04 section 17.04.240 to consolidate height exceptions and building height definition, and amending chapter 17.04, sections 17.04.260 and 17.04.350 to consolidate hotel/motel definitions, by title only, and set the second reading and adoption for the next regularly scheduled Council meeting of January 28, 2020.

BACKGROUND:

In response to recent long-range planning efforts and upcoming potential development projects, staff is recommending an ordinance update involving hotel/motel building height, which amends the definition of hotels/motels and allows a maximum height of four (4) stories and fifty (50'). At their December 17, 2019 meeting, the Planning Commission unanimously voted to recommend the Council adopt the proposed code update.

DISCUSSION:

This amendment addresses two issues related to hotels/motels: 1) provides a consistent definition of hotel/motel; and 2) increases the height from thirty (30) feet and two (2) stories to four (4) stories and fifty feet (50') in the HS zoning district for hotel/motel. The City is in escrow with a hotel developer for sale of property at 1023 Broadway Street. However, the developer has indicated that allowance for four stories will be necessary in order to attract a flagship hotel with one of the major brands. The primary reason for the current limit of two stories was the potential impact on the City's Fire ISO rating due to the absence of a ladder apparatus. The City Council recently approved a development impact fee on any buildings higher than 2-story, which will help fund the differential cost required to add a ladder attachment when the Fire Department replaces its next engine. Therefore, a strategy is in place to mitigate the cause for this restriction. Staff is currently assessing where else in the City three-story buildings may be appropriate. At this time, it is recommended to limit them only to hotels. This code update would allow hotels and motels to be four (4) stories tall within the Highway Service (H-S) zoning district. H-S zoning exists along Broadway Street (west of Lorenzo Ave.), the southern section of South 1st Street, and south of Highway 101 in the Broadway Circle area. *(See zoning map attached as **Exhibit 2**.)* The update also creates consistency among definitions for hotels and motels.

The proposed code update is detailed below:

- Amends Section 17.26.050 to allow hotels and motels to be four (4) stories and fifty (50') in height.

- Amends Sections 17.04.260 and 17.04.350 to change the definition of motels/hotels and consolidate redundant definitions.

- Repeals Section 17.48.070 regarding exceptions to height limits and moves this text under Section 17.04.240 (definition for "height of building").

ENVIRONMENTAL REVIEW:

The Ordinance is exempt from the California Environmental Quality Act ("CEQA") as it can be seen with certainty that there are no possibilities that the Ordinance will have significant effects on the environment pursuant to CEQA Guidelines section 15061(b)(3), as well as it is exempt because is consists of regulations and restrictions on activities to assure the maintenance, restoration, or enhancement of natural resources and the environment by prohibiting environmentally destructive components of building heights for hotels pursuant to CEQA Guidelines sections 15307 and 15308.

COST ANALYSIS:

There are no costs associated with this action.

ALTERNATIVES:

The following recommendations are provided for City Council consideration:

1. Approve staff's recommendations and introduce the Ordinance;
2. Direct staff to modify the Ordinance;
3. Do not adopt the Ordinance;
4. Request additional information; or
5. Provide staff other direction.

Exhibits:

Exhibit 1: Ordinance No. 2020-782
Exhibit 2: Zoning Map

Submitted by: _____
Doreen Liberto, AICP, Community Development Director

Approved by: _____
Steven Adams, City Manager

EXHIBIT 1

ORDINANCE NO. 2020-782

AN ORDINANCE OF THE CITY COUNCIL OF THE CITY OF KING AMENDING TITLE 17, CHAPTER 17.26, SECTION 17.26.050 OF THE KING CITY MUNICIPAL CODE ALLOWING FOUR STORIES AND FIFTY (50') FEET FOR HOTELS AND MOTELS IN THE HIGHWAY SERVICE DISTRICT, AMENDING CHAPTER 17.48 SECTION 17.48.070 AND CHAPTER 17.04 SECTION 17.04.240 TO CONSOLIDATE HEIGHT EXCEPTIONS AND BUILDING HEIGHT DEFINITION, AND AMENDING CHAPTER 17.04, SECTIONS 17.04.260 AND 17.04.350 TO CONSOLIDATE HOTEL/MOTEL DEFINITIONS

WHEREAS, Pursuant to Article XI, Section 7, of the California Constitution, the City of King ("City") may adopt and enforce ordinances and regulations not in conflict with general laws to protect and promote the public health, safety, and welfare of its citizens; and

WHEREAS, the proposed ordinance is consistent with the General Plan and any applicable Specific Plan(s); and

WHEREAS, the Council finds this ordinance is reasonable and necessary for the preservation of the public peace, health and safety; and

WHEREAS, the Council has approved a plan to acquire new fire apparatus to meet the fire needs of buildings up to four (4) stories and finds that the increased height to four (4) stories and fifty (50') feet for hotels and motels will not hamper fire protection; and

WHEREAS, new hotel developments typically need to be at least three (3) to four (4) stories to be economically viable and to accommodate sufficient parking and modern conveniences favored by travelers; and

WHEREAS, the Council finds that it is easier and more economical to construct elevators to help ensure compliance with the accessibility provisions of the Building Code; and

WHEREAS, definitions related to hotels, motels and building height in the Municipal Code need to be simplified and made consistent; and

WHEREAS, on December 17, 2019 the City of King Planning Commission ("Commission") conducted a public hearing to consider the proposed ordinance, and after considering public testimony, the staff report and all submitted evidence to the support the ordinance, the Commission recommended the City Council ("Council") approve the proposed ordinance; and

WHEREAS, in accordance with the California Environmental Quality Act ("CEQA"), and pursuant to CEQA Guideline, sections 15378 and 15061(b)(3), this activity is not a "project" subject to CEQA as it can be seen with certainty that there is no possibility that an activity may have a significant effect on the environment; and

WHEREAS, on January 14, 2020, the Council conducted a public hearing to consider the Commission's recommendation, and after considering public testimony, the staff report and all submitted evidence, the Council now desires to approve the proposed ordinance.

NOW THEREFORE, the City Council of the City of King does hereby ordain as follows:

SECTION 1. The above recitals are incorporated hereby by reference.

SECTION 2. The City Council has reviewed the proposed ordinance and hereby finds that it is consistent with the General Plan and all applicable Specific Plan(s).

SECTION 3. The City Council, based upon its own independent judgement, finds that the proposed ordinance promotes and protects the health, safety, welfare and quality of life of the City of King residents.

SECTION 4. The Ordinance is exempt from the California Environmental Quality Act ("CEQA") as it can be seen with certainty that there is no possibility that it will have a significant effect on the environment pursuant to CEQA Guidelines section 15061(b)(3), as well as it is also exempt because it consists of regulations and restrictions on activities to assure the maintenance, restoration, or enhancement of natural resources and the environment by prohibiting environmentally destructive components of building heights for hotels, pursuant to CEQA Guidelines sections 15307 and 15308.

SECTION 5. Chapter 17.26, of Title 17 of the King City Municipal Code is hereby amended as follows:

Section 17.26.050 Maximum building height.

~~No building shall be more than two stories, nor more than thirty feet in height. (Ord. 660 § 1, 2006; Ord. 429 § 1, 1980; Ord. 354 § 4.29.5, 1973)~~

With the exception of hotels and motels, no building shall be more than two (2) stories and thirty (30') feet in height. Hotels and motels shall be no more than four (4) stories and fifty (50') feet in height.

SECTION 6. Chapter 17.04, of Title 17 of the King City Municipal Code is hereby amended as follows:

Section 17.04.260 Hotel.

~~"Hotel" means any building or portion thereof containing six or more guest rooms used, designed or intended to be used, let or hired out to be occupied, or which are occupied by six or more individuals for compensation paid directly or indirectly. Hotel for the purpose of this title means "motel." (Ord. 354 § 2.2.28, 1973)~~

SECTION 7. Chapter 17.04, of Title 17 of the King City Municipal Code is herby amended as follows:

Section 17.04.350 Motel or hotel.

~~"Motel" or "hotel" means one or a group of two or more detached or semi-detached buildings containing guest rooms, with automobile parking space provided in connection therewith, which building or group of buildings is designed and used primarily for the accommodation of transient automobile travelers; provided, that the guest room or rooms shall not contain any mechanical equipment for the preparation or storage of food or beverages, unless such equipment was incorporated into the approved design of the structure. (Ord. 561 § 2, 1993; Ord. 354 § 2.2.3, 1973)~~

For purposes of determining applicability of Transient Occupancy Tax, any new building containing six or more guest rooms intended or designed to be used, or which are used, rented or hired out to be occupied, or which are occupied for sleeping purposes by guests.

SECTION 8. Chapter 17.48, of Title 17 of the King City Municipal Code is hereby amended as follows:

Section 17.48.070 Exceptions to Height Limits.

~~**17.48.070 Exceptions to height limits.**~~

~~Where chimneys, silos, cupolas, flag poles, monuments, gas storage holders, radio, television and other towers, water tanks, church steeples and similar structures and mechanical appurtenances are permitted in a district, height limits may be exceeded upon the securing of a use permit in each case. (Ord. 354 § 5.1.6, 1973)~~

SECTION 9. Chapter 17.04, of Title 17 of the King City Municipal Code is hereby amended as follows:

Section 17.04.240 Height of building.

"Height of building" means the vertical distance from the average level of the highest and lowest point of that portion of the lot covered by the building to the

topmost point of the roof, excluding elevator equipment rooms, ventilating and air conditioning equipment.

Where chimneys, silos, cupolas, flag poles, monuments, gas storage holders, radio, televisions and other towers, water tanks, church steeples and similar structures and mechanical appurtenances are permitted in a district, height limits may be exceeded upon the securing of a use permit in each case.

SECTION 10. This ordinance shall take effect and be in full force and effect from and after thirty (30) calendar days after its final passage and adoption. Within fifteen (15) calendar days after its adoption, the ordinance, or a summary of the ordinance, shall be published once in a newspaper of general circulation.

I HEREBY CERTIFY that the foregoing ordinance was introduced by the City Council after waiving the reading, except by Title, at a regular meeting thereof held on the ___ day of ____ 2020, and adopted the ordinance after the second reading at a regular meeting held on the ____day of ____ 2020, by the following roll call vote:

AYES:
NOES:
ABSTAIN:
ABSENT:

ATTEST

_____
STEVEN ADAMS, City Clerk

CITY OF KING

By: _____
MIKE LEBARRE, Mayor

APPROVED AS TO FORM:

By: _____
ROY C. SANTOS, City Attorney
Aleshire & Wynder, LLP

I, _____, City Clerk of the City of King, California, DO HEREBY CERTIFY that the foregoing is a true and accurate copy of the ordinance passed and adopted by the City Council of the City of King on the date and by the vote indicted herein.

EXHIBIT 2

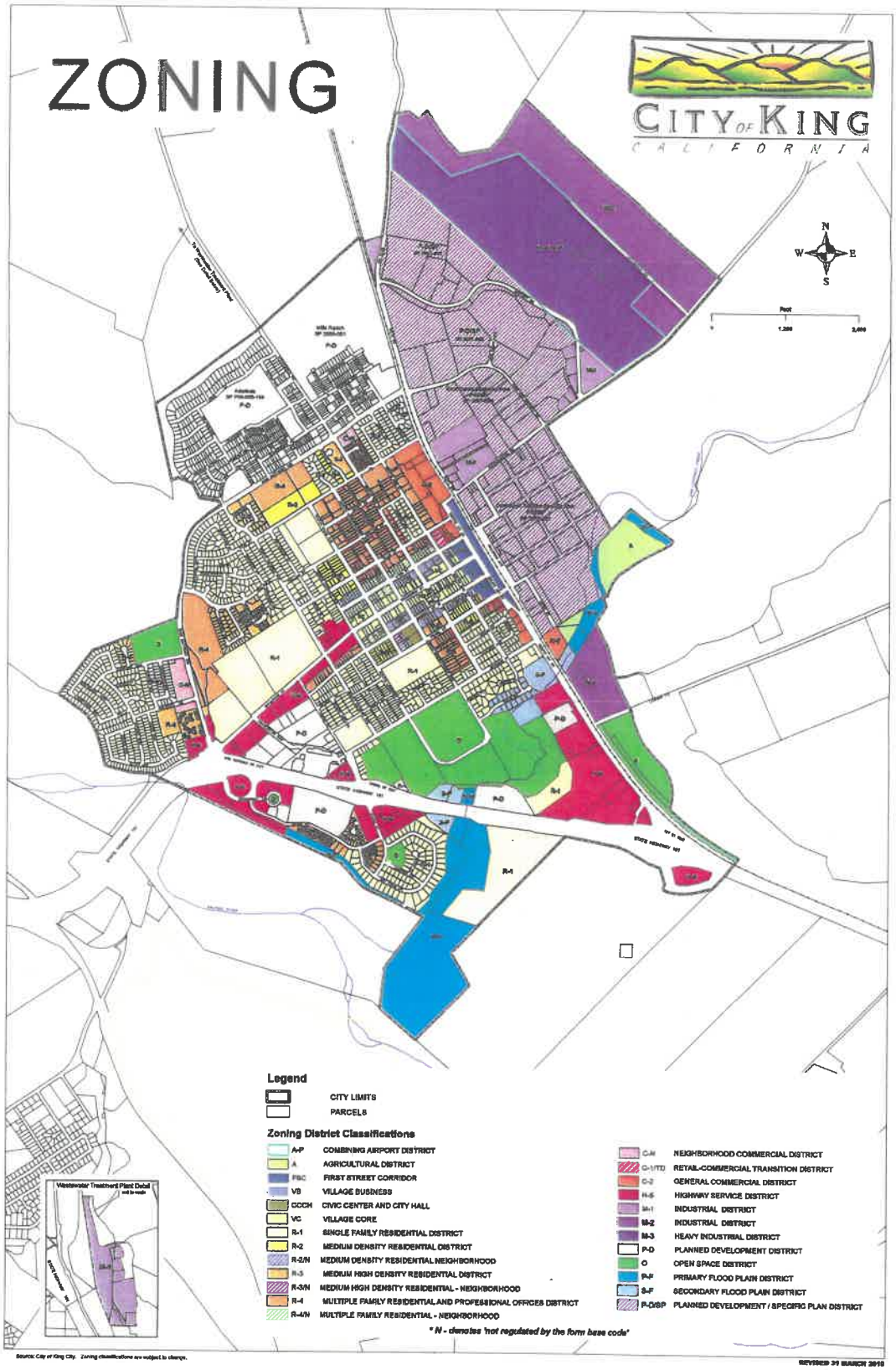
ZONING
CITY OF KING
CALIFORNIA
N
W
E
S
Feet
Legend
CITY LIMITS
PARCELS
Zoning District Classifications
A-P COMBINING AIRPORT DISTRICT
A AGRICULTURAL DISTRICT
FSC FIRST STREET CORRIDOR
VB VILLAGE BUSINESS
CCCH CIVIC CENTER AND CITY HALL
VC VILLAGE CORE
R-1 SINGLE FAMILY RESIDENTIAL DISTRICT
R-2 MEDIUM DENSITY RESIDENTIAL DISTRICT
R-2/N MEDIUM DENSITY RESIDENTIAL NEIGHBORHOOD
R-3 MEDIUM HIGH DENSITY RESIDENTIAL DISTRICT
R-3/N MEDIUM HIGH DENSITY RESIDENTIAL - NEIGHBORHOOD
R-4 MULTIPLE FAMILY RESIDENTIAL AND PROFESSIONAL OFFICES DISTRICT
R-4/N MULTIPLE FAMILY RESIDENTIAL - NEIGHBORHOOD
C-N NEIGHBORHOOD COMMERCIAL DISTRICT
C-1/TD RETAIL-COMMERCIAL TRANSITION DISTRICT
C-2 GENERAL COMMERCIAL DISTRICT
H-S HIGHWAY SERVICE DISTRICT
M-1 INDUSTRIAL DISTRICT
M-2 INDUSTRIAL DISTRICT
M-3 HEAVY INDUSTRIAL DISTRICT
P-D PLANNED DEVELOPMENT DISTRICT
O OPEN SPACE DISTRICT
P-F PRIMARY FLOOD PLAIN DISTRICT
S-F SECONDARY FLOOD PLAIN DISTRICT
P-D/SP PLANNED DEVELOPMENT / SPECIFIC PLAN DISTRICT
* N - denotes 'not regulated by the form base code'
Wastewater Treatment Plant Detail
Source: City of King City. Zoning classifications are subject to change.
REVISED 31 MARCH 2010

KING CITY
CALIFORNIA

Item No. 10(C)

REPORT TO THE CITY COUNCIL

DATE: **JANUARY 14, 2020**

TO: **MAYOR AND MEMBERS OF THE CITY COUNCIL**

FROM: **DOREEN LIBERTO, AICP, COMMUNITY DEVELOPMENT DIRECTOR**

RE: **CONSIDERATION OF ORDINANCE OF THE CITY COUNCIL OF THE CITY OF KING AMENDING MUNICIPAL CODE TITLE 7, CHAPTER 17.04, AND AMENDING THE HISTORIC CORRIDOR REVITALIZATION PLAN TO ADD DEFINITION FOR "DRINKING ESTABLISHMENT" AND REMOVE REDUNDANT DEFINITIONS**

RECOMMENDATION:

It is recommended City Council open the public hearing, consider public testimony, introduce and conduct the first reading of an Ordinance amending Municipal Code Title 7, Chapter 17.04, and amending the historic corridor revitalization plan to add definition for "drinking establishment" and remove redundant definitions, by title only, and set the second reading and adoption for the next regularly scheduled Council meeting of January 28, 2020.

BACKGROUND:

In response to recent long-range planning efforts and code enforcement actions, staff is recommending an ordinance update involving drinking establishments, which creates a definition of "Drinking Establishments" (including Night Clubs) and establishes new related standards. At their December 17, 2019 meeting, the Planning Commission unanimously voted to recommend the Council adopt the proposed code update.

DISCUSSION:

This amendment creates consistency among definitions for different types of establishments serving alcohol by establishing a new category: "Drinking Establishment." The City of King Historic Corridor Revitalization Plan will also be revised to be made consistent with the Municipal Code.

There have been neighborhood impacts related to private parties held at commercial establishments, especially when they extend late into the night and alcohol is being served. In response, this update will help mitigate these impacts by requiring private parties held on commercial property to obtain a Temporary Use Permit. Since the City is attempting to attract more restaurant activity in the downtown, it was also staff's objective to create a separate use category to alleviate current disincentives for restaurants to provide live entertainment.

The proposed code update is detailed below:

- Amends Section 17.04.135 "Drinking Establishment" definition to include cocktail lounges and night clubs.

- Adopts Section 17.04.395 to define "Private Parties" held at commercial properties where alcohol is served and/or entertainment is provided. Establishes requirement for a Temporary Use Permit for parties meeting the new definition.

- Amends Section 17.26.030 to remove "Cocktail Lounges" and add "Drinking Establishments" as a permitted use subject to obtaining a conditional use permit.

- Amends Sections 17.23.030 and 17.22.030 to remove embedded definition of "Drinking Establishments."

- Amends Chapter 4, Section 4.10 and Table 4.7 of the City of King Historic Corridor Revitalization Plan to include a consistent definition for "Drinking Establishment".

ENVIRONMENTAL REVIEW:

The Ordinance is exempt from the California Environmental Quality Act ("CEQA") as it can be seen with certainty that there are no possibilities that the Ordinance will have significant effects on the environment pursuant to CEQA Guidelines section 15061(b)(3), as well as it is exempt because it consists of regulations and restrictions on activities to assure the maintenance, restoration, or enhancement of natural resources and the environment by prohibiting environmentally destructive components of drinking establishments pursuant to CEQA Guidelines sections 15307 and 15308.

COST ANALYSIS:

There are no costs associated with this action.

ALTERNATIVES:

The following recommendations are provided for City Council consideration:

1. Approve staff's recommendations and introduce the Ordinance;
2. Direct staff to modify the Ordinance;
3. Do not adopt the Ordinance;
4. Request additional information; or
5. Provide staff other direction.

Exhibits:

Exhibit 1: Ordinance No. 2020-783

Submitted by: _____
Doreen Liberto, AICP, Community Development Director

Approved by: _____
Steven Adams, City Manager

EXHIBIT 1

ORDINANCE NO. 2020-783

AN ORDINANCE OF THE CITY COUNCIL OF THE CITY OF KING AMENDING MUNICIPAL CODE TITLE 7, CHAPTER 17.04, AND AMENDING THE HISTORIC CORRIDOR REVITALIZATION PLAN TO ADD DEFINITION FOR "DRINKING ESTABLISHMENT" AND REMOVE REDUNDANT DEFINITIONS

WHEREAS, Pursuant to Article XI, Section 7, of the California Constitution, the City of King ("City") may adopt and enforce ordinances and regulations not in conflict with general laws to protect and promote the public health, safety, and welfare of its citizens; and

WHEREAS, on December 17, 2019, the City of King Planning Commission ("Commission") conducted a public hearing to consider the proposed ordinance, and after considering public testimony, the staff report and all submitted evidence to the support the ordinance, the Commission recommended the City Council ("Council") [approve/deny] the proposed ordinance; and

WHEREAS, the proposed ordinance is consistent with the General Plan and any applicable Specific Plan(s); and

WHEREAS, the Council finds this ordinance is reasonable and necessary for the preservation of the public peace, health and safety; and

WHEREAS, the Council finds that Night Clubs are not defined in the Municipal Code; and

WHEREAS, the Council finds it is appropriate to classify Night Clubs and other establishments primarily serving alcohol as "Drinking Establishments"; and

WHEREAS, the Council finds it is appropriate that private parties (a temporary use) held at businesses shall obtain a Temporary Use Permit; and

WHEREAS, in accordance with the California Environmental Quality Act ("CEQA"), and pursuant to CEQA Guideline, sections 15378 and 15061(b)(3), this activity is not a "project" subject to CEQA as it can be seen with certainty that there is no possibility that an activity may have a significant effect on the environment; and

WHEREAS, on January 14, 2020, the Council conducted a public hearing to consider the Commission's recommendation, and after considering public testimony, the staff report and all submitted evidence, the Council now desires to approve the proposed ordinance.

NOW THEREFORE, the City Council of the City of King does hereby ordain as follows:

SECTION 1. The above recitals are incorporated hereby by reference.

SECTION 2. The City Council has reviewed the proposed ordinance and hereby finds that it is consistent with the General Plan and all applicable Specific Plan(s).

SECTION 3. The City Council, based upon its own independent judgement, finds that the proposed ordinance promotes and protects the health, safety, welfare and quality of life of the City of King residents.

SECTION 4. The Ordinance is exempt from the California Environmental Quality Act ("CEQA") as it can be seen with certainty that there is no possibility that it will have a significant effect on the environment pursuant to CEQA Guidelines section 15061(b)(3), as well as it is also exempt because it consists of regulations and restrictions on activities to assure the maintenance, restoration, or enhancement of natural resources and the environment by prohibiting environmentally destructive components of drinking establishments, pursuant to CEQA Guidelines sections 15307 and 15308.

SECTION 5. Chapter 17.04, of Title 17 of the King City Municipal Code is hereby amended to read as follows:

Chapter 17.04
DEFINITIONS

Section 17.04.135 Drinking Establishment.

A business where alcoholic beverages are sold for on-site consumption, which are not part of a larger restaurant. Includes bars, taverns, pubs, wine bars, **cocktail lounges, night clubs,** and tasting rooms, and similar establishments where any food service is subordinate to the sale of alcoholic beverages. **May also provide entertainment, examples of which include live music and/or dancing, comedy, etc.** May also include beer brewing as part of a microbrewery ("brew-pub") and other beverage tasting facilities.

Persons under twenty-one (21) years of age are not allowed to enter and remain on the premises.

Section 17.04.395 Private Parties.

Parties or gatherings not open to the public held at commercial properties where alcohol is served and/or entertainment is provided. Individuals or businesses shall acquire a Temporary Use Permit prior to hosting a Private Party. Permitted hours are between 8AM – 11PM. A commercial property may host up to (4) private parties per calendar year. The host shall obtain any necessary permits or

clearances from the State of California Alcohol Beverage Control (ABC) and from the City's Building Department for occupancy load.

SECTION 6. Chapter 17.26, of Title 17 of the King City Municipal Code is hereby amended to read as follows:

Chapter 17.26

HIGHWAY SERVICE DISTRICT

Section 17.26.030 Uses permitted subject to obtaining conditional use permit.

(3) Restaurants including:

(i) With and without entertainment and/or serving alcoholic beverages;
(ii) Fast food restaurants with and without drive-thru windows;
~~(iii) Cocktail lounges.~~

(10) Drinking Establishments;

~~(10)~~ **(11)** Other uses similar to, and no more objectionable than the uses identified above, as determined by the planning commission, pursuant to Municipal Code Section 17.02.050. (Ord. 660 § 1, 2006; Ord. 569 § 6, 1994; Ord. 487 § 2, 1985; Ord. 413 § 1, 1979; Ord. 365 § 3, 1974; Ord. 354 § 4.29.3, 1973)

SECTION 7. Chapter 17.23, of Title 17 of the King City Municipal Code is hereby amended to read as follows:

Chapter 17.23
RETAIL-COMMERCIAL TRANSITION DISTRICT

Section 17.23.030 Uses permitted subject to obtaining permit.

(3) **Drinking Establishments** ~~Cocktail lounges engaged in the service of alcoholic beverages under an on-sale general license or under an on-sale beer and wine license issued by the State Alcoholic Beverage Control Board~~;

SECTION 8. Chapter 17.22, of Title 17 of the King City Municipal Code is hereby amended to read as follows:

Chapter 17.22
RETAIL BUSINESS DISTRICT

Section 17.22.030 Uses permitted subject to obtaining a permit.

(3) **Drinking Establishments** ~~Cocktail lounges engaged in the service of alcoholic beverages under an on-sale general license or under an on-sale beer and wine license issued by the State Alcoholic Beverage Control Board~~;

SECTION 9. Amend Chapter 4, Section 4.10, of the City of King Historic Corridor Revitalization Plan as follows:

B. Definitions
~~**Bar, Tavern, Night Club**~~ **Drinking Establishment:**

~~**Bar, Tavern:**~~ A business where alcoholic beverages are sold for on-site consumption, which are not part of a larger restaurant. Includes bars, taverns, pubs, wine bars, **cocktail lounges, night clubs,** and tasting rooms, and similar establishments where any food service is subordinate to the sale of alcoholic beverages. **May also provide entertainment, examples of which include live music and/or dancing, comedy, etc.** May also include beer brewing as part of a microbrewery ("brew-pub") and other beverage tasting facilities.

~~**Night Club:** A facility serving alcoholic beverages for on-site consumption, and providing entertainment, examples of which include live music and/or dancing, comedy, etc. Does not include adult oriented businesses.~~

SECTION 10. Amend Chapter 4, Table 4.7, of the City of King Historic Corridor Revitalization Plan as follows:

LAND USE TYPE	**ZONE**		
Retail	**FSC**	**VC**	**VB**
Artisan Shop	P	P	P
~~Bar, tavern, night club~~ **Drinking Establishment**	UP	UP	-

SECTION 11. This ordinance shall take effect and be in full force and effect from and after thirty (30) calendar days after its final passage and adoption. Within fifteen (15) calendar days after its adoption, the ordinance, or a summary of the ordinance, shall be published once in a newspaper of general circulation.

I HEREBY CERTIFY that the foregoing ordinance was introduced by the City Council after waiving the reading, except by Title, at a regular meeting thereof held on the ___ day of ____ 2020, and adopted the ordinance after the second reading at a regular meeting held on the ____day of ____ 2020, by the following roll call vote:

AYES:
NOES:
ABSTAIN:
ABSENT:

ATTEST

_____
STEVEN ADAMS, City Clerk

CITY OF KING

By: _____
MIKE LEBARRE, Mayor

APPROVED AS TO FORM:

By: _____
ROY C. SANTOS, City Attorney
Aleshire & Wynder, LLP

I, _____, City Clerk of the City of King, California, DO HEREBY CERTIFY that the foregoing is a true and accurate copy of the ordinance passed and adopted by the City Council of the City of King on the date and by the vote indicted herein.

KING CITY
CALIFORNIA

Item No. 10(D)

REPORT TO THE CITY COUNCIL

DATE: **JANUARY 14, 2020**

TO: **MAYOR AND MEMBERS OF THE CITY COUNCIL**

FROM: **DOREEN LIBERTO, AICP, COMMUNITY DEVELOPMENT DIRECTOR**

RE: **CONSIDERATION OF ORDINANCE OF THE CITY COUNCIL OF THE CITY OF KING AMENDING TITLE 7, CHAPTER 7.51 AND TITLE 13, CHAPTER 13.08, OF THE KING CITY MUNICIPAL CODE TO EXTEND PROHIBITION OF DISCHARGE OF OFFENSIVE SUBSTANCES TO PRIVATE PROPERTY AND TO INCLUDE YARD DEBRIS AS ON OFFENSIVE SUBSTANCE.**

RECOMMENDATION:

It is recommended City Council introduce to be read by title only Ordinance No. 2020-784 amending provisions involving yard debris, open the hearing, allow for public testimony, close the hearing, waive first reading of the Ordinance, and approve the introduction of the Ordinance.

BACKGROUND:

In response to recent long-range planning efforts and code enforcement actions, staff is recommending an ordinance update involving yard debris, which extends prohibition of discharge of offensive substances to private property and designate yard debris as an offensive substance. At their December 17, 2019 meeting, the Planning Commission voted to recommend the Council adopt the Ordinance. There was discussion regarding yard debris that already exists within the right-of-way (i.e. on a sidewalk) being blown further into the street. The proposed code will prohibit yard debris being blown from private property into the street, but it does not address situations where debris already exists in the right-of-way. If the Council approves the proposed municipal code language, Code Enforcement staff can monitor the effectiveness of the new standards and report back to the Community Development Department.

DISCUSSION:

There used to be a Municipal Code provision that prohibited residents from blowing their leaves into the street or onto a neighbor's property. However, staff recently discovered it was deleted during a prior code revision. Recently, the Code Enforcement Officer has received complaints, but has been limited in his ability to respond since the restriction is no longer clearly set forth in the Municipal Code. The City has attempted to discourage this practice because it generates too many leaves for the street sweeper to process. This amendment clarifies the requirement of discharging offensive substances within the public right-of-way or private property. The proposed changes will clarify that yard debris is an offensive substance that cannot be transferred from one private property to another or into the right-of-way where it can create hazards to users of sidewalks and roads.

The proposed code update is detailed below:

- Amends Section 13.08.010 to add yard debris as an offensive substance, and to clarify that discharge of offensive substances cannot occur in the public right-of-way OR on private property.

- Amends Section 7.51.102 to include Yard Debris as a nuisance under "Weeds, vegetation, and rubbish."

ENVIRONMENTAL REVIEW:

The Ordinance is exempt from the California Environmental Quality Act ("CEQA") as it can be seen with certainty that there are no possibilities that the Ordinance will have significant effects on the environment pursuant to CEQA Guidelines section 15061(b)(3), as well as it is exempt because it consists of regulations and restrictions on activities to assure the maintenance, restoration, or enhancement of natural resources and the environment by prohibiting environmentally destructive components of yard debris pursuant to CEQA Guidelines sections 15307 and 15308.

COST ANALYSIS:

There are no costs associated with this action.

ALTERNATIVES:

The following recommendations are provided for City Council consideration:

1. Approve staff's recommendations and introduce the Ordinance;
2. Direct staff to modify the Ordinance;
3. Do not adopt the Ordinance;
4. Request additional information; or
5. Provide staff other direction.

Exhibits:

Exhibit 1: Ordinance No. 2020-784

Submitted by: _____
Doreen Liberto, AICP, Community Development Director

Approved by: _____
Steven Adams, City Manager

EXHIBIT 1

ORDINANCE NO. 2020-784

AN ORDINANCE OF THE CITY COUNCIL OF THE CITY OF KING AMENDING TITLE 7, CHAPTER 7.51 AND TITLE 13, CHAPTER 13.08, OF THE KING CITY MUNICIPAL CODE TO EXTEND PROHIBITION OF DISCHARGE OF OFFENSIVE SUBSTANCES TO PRIVATE PROPERTY AND TO INCLUDE YARD DEBRIS AS AN OFFENSIVE SUBSTANCE

WHEREAS, Pursuant to Article XI, Section 7, of the California Constitution, the City of King ("City") may adopt and enforce ordinances and regulations not in conflict with general laws to protect and promote the public health, safety, and welfare of its citizens; and

WHEREAS, on December 17, 2019 the City of King Planning Commission ("Commission") conducted a public hearing to consider the proposed ordinance, and after considering public testimony, the staff report and all submitted evidence to the support the ordinance, the Commission recommended the City Council ("Council") approve the proposed ordinance; and

WHEREAS, the proposed ordinance is consistent with the General Plan and any applicable Specific Plan(s); and

WHEREAS, the Council finds this ordinance is reasonable and necessary for the preservation of the public peace, health and safety; and

WHEREAS, the Council finds that fallen tree leaves and other yard debris create a nuisance when they are moved from one property to another property, and from private property into the public right-of-way; and

WHEREAS, in accordance with the California Environmental Quality Act ("CEQA"), and pursuant to CEQA Guideline, sections 15378 and 15061(b)(3), this activity is not a "project" subject to CEQA as it can be seen with certainty that there is no possibility that an activity may have a significant effect on the environment; and

WHEREAS, on January 14, 2020, the Council conducted a public hearing to consider the Commission's recommendation, and after considering public testimony, the staff report and all submitted evidence, the Council now desires to approve the proposed ordinance.

NOW THEREFORE, the City Council of the City of King does hereby ordain as follows:

SECTION 1. The above recitals are incorporated hereby by reference.

SECTION 2. The City Council has reviewed the proposed ordinance and hereby finds that it is consistent with the General Plan and all applicable Specific Plan(s).

SECTION 3. The City Council, based upon its own independent judgement, finds that the proposed ordinance promotes and protects the health, safety, welfare and quality of life of the City of King residents.

SECTION 4. The Ordinance is exempt from the California Environmental Quality Act ("CEQA") as it can be seen with certainty that there is no possibility that it will have a significant effect on the environment pursuant to CEQA Guidelines section 15061(b)(3), as well as it is also exempt because it consists of regulations and restrictions on activities to assure the maintenance, restoration, or enhancement of natural resources and the environment by prohibiting environmentally destructive components of yard debris, pursuant to CEQA Guidelines sections 15307 and 15308.

SECTION 5. Chapter 13.08, of Title 13 of the King City Municipal Code is hereby amended to read as follows:

Chapter 13.08
DISCHARGE OF OFFENSIVE SUBSTANCES ~~ON CITY STREETS~~

Section 13.08.010 Unlawful.

It is unlawful to negligently, ~~wilfully~~ **willfully** or maliciously discharge, throw, deposit, permit to pass onto, **sweep, blow** or place where it does pass onto any **private property of other resident**, public street, alley, parkway or sidewalk in the city, any petroleum, acid, coal or oil, tar, aniline, asphalt, bitumen, or residuary product of petroleum, oil, grease, water, rubbish, garbage, debris **(including leaves and other yard debris)**, trash, sweepings, animal or vegetable matter, or any putrid or offensive liquid, substance or matter, or in any other manner cause any interference with or hazard to public travel or damage to **private property or** public property upon said public streets, parkways or sidewalks. (Ord. 221 § 1, 1949)

SECTION 6. Chapter 7.51, of Title 7 of the King City Municipal Code is hereby amended to read as follows:

Section 7.51.102 Weeds, vegetation, and rubbish.

> No person, whether such person is the owner, agent, or person in control of any lot or parcel of land within the city, shall maintain, permit, or allow such premises, or adjoining public way, sidewalk, street and/or alley, to be maintained in any of the following conditions, which are declared to be a public nuisance. It is the duty of the property owner to destroy or remove all such prohibited materials.

(a) Refuge for Vermin. Dead, decayed, diseased or hazardous trees, weeds, grass, rubbish, refuse, dirt, debris, or any other matter or material which may provide a breeding place or refuge for rodents, insects, or other vermin.
(b) Vegetation Near Chimneys. Dead vegetative growth overhanging a structure or any tree branch or other vegetative growth which extends within ten feet of the outlet of a chimney.
(c) Pollen. Weeds which may produce pollen which is injurious to the health, safety, comfort, or welfare of the residents of the city.
(d) Fire Hazard: Fire Hydrants. Weeds, rubbish, refuse, dirt, debris, or any other matter or material which may become a fire or health hazard, or is within thirty-six inches of a fire hydrant.
(e) Overhanging Vegetation. Vegetative growth overhanging a public street by less than fourteen feet in height or a public sidewalk by less than eight feet in height.
(f) Other Vegetation. Any other vegetation or materials which, because of lack of maintenance, create conditions which may become a fire or health hazard, including weeds which are otherwise subject to abatement by law.
(g) Yard Debris. See Chapter 13, Section 13.08.010.

SECTION 7. This ordinance shall take effect and be in full force and effect from and after thirty (30) calendar days after its final passage and adoption. Within fifteen (15) calendar days after its adoption, the ordinance, or a summary of the ordinance, shall be published once in a newspaper of general circulation.

I HEREBY CERTIFY that the foregoing ordinance was introduced by the City Council after waiving the reading, except by Title, at a regular meeting thereof held on the ___ day of ____ 2020, and adopted the ordinance after the second reading at a regular meeting held on the ____day of ____ 2020, by the following roll call vote:

AYES:
NOES:
ABSTAIN:
ABSENT:

ATTEST

_____
STEVEN ADAMS, City Clerk

CITY OF KING

By: _____
MIKE LEBARRE, Mayor

APPROVED AS TO FORM:

By: _____
ROY C. SANTOS, City Attorney
Aleshire & Wynder, LLP

I, _____, City Clerk of the City of King, California, DO HEREBY CERTIFY that the foregoing is a true and accurate copy of the ordinance passed and adopted by the City Council of the City of King on the date and by the vote indicted herein.

KING CITY
CALIFORNIA

Item No. 10(E)

REPORT TO THE CITY COUNCIL

DATE: **JANUARY 14, 2020**

TO: **MAYOR AND MEMBERS OF THE CITY COUNCIL**

FROM: **DOREEN LIBERTO, AICP, COMMUNITY DEVELOPMENT DIRECTOR**

RE: **CONSIDERATION OF ORDINANCE OF THE CITY COUNCIL OF THE CITY OF KING AMENDING SECTIONS 17.48.060, 17.04.450 AND 17.16.040 OF TITLE 17, OF THE KING CITY MUNICIPAL CODE TO REMOVE LANGUAGE RELATED TO SIGNS WHERE IT EXISTS OUTSIDE CHAPTER 17.55 SIGNS**

RECOMMENDATION:

It is recommended City Council open the public hearing, consider public testimony, introduce and conduct the first reading of an Ordinance amending Sections 17.48.060, 17.04.450 and 17.16.040 of Title 17, of the King City Municipal Code to remove language related to signs where it exists outside chapter 17.55 signs, by title only, and set the second reading and adoption for the next regularly scheduled Council meeting of January 28, 2020.

BACKGROUND:

In response to recent long-range planning efforts and code enforcement actions, staff is recommending an ordinance update involving signs, which removes language related to signs where it exists outside Chapter 17.55 Signs. At their December 17, 2019 meeting, the Planning Commission unanimously voted to recommend the City Council adopt the proposed code update.

DISCUSSION:

This amendment will remove references to signs within the Municipal Code where they exist outside of Chapter 17.55 (the sign ordinance). The City is currently working on an additional update to Chapter 17.55 that will be brought before the Planning Commission and City Council in early 2020.

The proposed code update is detailed below:

- Repeals Section 17.48.060 regarding real estate signs.
- Repeals Section 17.04.450 "Sign" definition.
- Amends Section 17.16.040 to remove subsection (3) regarding signs on accessory buildings.

ENVIRONMENTAL REVIEW:

The Ordinance is exempt from the California Environmental Quality Act ("CEQA") as it can be seen with certainty that there are no possibilities that the Ordinance will have significant effects on the environment pursuant to CEQA Guidelines section 15061(b)(3), as well as it is exempt because it consists of regulations and restrictions on activities to assure the maintenance, restoration, or enhancement of natural resources and the environment by prohibiting environmentally destructive components of signs pursuant to CEQA Guidelines sections 15307 and 15308.

COST ANALYSIS:

There are no costs associated with this action.

ALTERNATIVES:

The following recommendations are provided for City Council consideration:

1. Approve staff's recommendations and introduce the Ordinance;
2. Direct staff to modify the Ordinance;
3. Do not adopt the Ordinance;
4. Request additional information; or
5. Provide staff other direction.

Exhibits:

Exhibit 1: Ordinance No. 2020-785

Submitted by: Ed Serna for
Doreen Liberto, AICP, Community Development Director

Approved by: _____
Steven Adams, City Manager

EXHIBIT 1

ORDINANCE NO. 2020-785

AN ORDINANCE OF THE CITY COUNCIL OF THE CITY OF KING AMENDING SECTIONS 17.48.060, 17.04.450 AND 17.16.040 OF TITLE 17, OF THE KING CITY MUNICIPAL CODE TO REMOVE LANGUAGE RELATED TO SIGNS WHERE IT EXISTS OUTSIDE CHAPTER 17.55 SIGNS

WHEREAS, Pursuant to Article XI, Section 7, of the California Constitution, the City of King ("City") may adopt and enforce ordinances and regulations not in conflict with general laws to protect and promote the public health, safety, and welfare of its citizens; and

WHEREAS, on December 17, 2019, the City of King Planning Commission ("Commission") conducted a public hearing to consider the proposed ordinance, and after considering public testimony, the staff report and all submitted evidence to the support the ordinance, the Commission recommended the City Council ("Council") approve the proposed ordinance; and

WHEREAS, the proposed ordinance is consistent with the General Plan and any applicable Specific Plan(s); and

WHEREAS, the Council finds this ordinance is reasonable and necessary for the preservation of the public peace, health and safety; and

WHEREAS, the Council finds that all code language related to signs should exist in Chapter 17.55 SIGNS; and

WHEREAS, in accordance with the California Environmental Quality Act ("CEQA"), and pursuant to CEQA Guideline, sections 15378 and 15061(b)(3), this activity is not a "project" subject to CEQA as it can be seen with certainty that there is no possibility that an activity may have a significant effect on the environment; and

WHEREAS, on January 14, 2020, the Council conducted a public hearing to consider the Commission's recommendation, and after considering public testimony, the staff report and all submitted evidence, the Council now desires to approve the proposed ordinance.

NOW THEREFORE, the City Council of the City of King does hereby ordain as follows:

SECTION 1. The above recitals are incorporated hereby by reference.

SECTION 2. The City Council has reviewed the proposed ordinance and hereby finds that it is consistent with the General Plan and all applicable Specific Plan(s).

SECTION 3. The City Council, based upon its own independent judgement, finds that the proposed ordinance promotes and protects the health, safety, welfare and quality of life of the City of King residents.

SECTION 4. The Ordinance is exempt from the California Environmental Quality Act ("CEQA") as it can be seen with certainty that there is no possibility that it will have a significant effect on the environment pursuant to CEQA Guidelines section 15061(b)(3), as well as it is also exempt because it consists of regulations and restrictions on activities to assure the maintenance, restoration, or enhancement of natural resources and the environment by prohibiting environmentally destructive components of sign regulations, pursuant to CEQA Guidelines sections 15307 and 15308.

SECTION 5. Chapter 17.48, of Title 17 of the King City Municipal Code is hereby amended as follows:

Section 17.48.060 Real estate signs permitted when.

~~Signs for the advertising of the sale of a subdivision may be displayed on the site of the subdivision, upon the securing of a use permit for the erection of such signs. (Ord. 354 § 5.1.5, 1973)~~

SECTION 6. Chapter 17.04, of Title 17 of the King City Municipal Code is hereby amended as follows:

Section 17.04.450 Sign.

~~"Sign" means any advertising display or structure. (Ord. 354 § 2.2.45, 1973)~~

SECTION 7. Chapter 17.16, of Title 17 of the King City Municipal Code is hereby amended as follows:

Section 17.16.040 Accessory buildings and uses permitted.

The following shall be permitted:

(1) Accessory buildings, only if constructed simultaneously with or subsequent to the main building on the same lot;

(2) Accessory uses which are normally incidental to uses permitted. This is not to be construed as permitting any commercial use;

~~(3) One sign, not over four square feet in area, when attached to the main building on the lot and when appurtenant to an allowed use; provided, that the sign shall contain only the name, or name and street number, of the project (e.g., "Peppertree Apartments") and shall not advertise any product or service. (Ord. 425 § 2(a), 1980; Ord. 354 § 4.24.4, 1973)~~

SECTION 8. This ordinance shall take effect and be in full force and effect from and after thirty (30) calendar days after its final passage and adoption. Within fifteen (15) calendar days after its adoption, the ordinance, or a summary of the ordinance, shall be published once in a newspaper of general circulation.

I HEREBY CERTIFY that the foregoing ordinance was introduced by the City Council after waiving the reading, except by Title, at a regular meeting thereof held on the ___ day of ____ 2020, and adopted the ordinance after the second reading at a regular meeting held on the ____day of ____ 2020, by the following roll call vote:

AYES:
NOES:
ABSTAIN:
ABSENT:

ATTEST

_____
STEVEN ADAMS, City Clerk

CITY OF KING

By: _____
MIKE LEBARRE, Mayor

APPROVED AS TO FORM:

By: _____
ROY C. SANTOS, City Attorney
Aleshire & Wynder, LLP

I, _____, City Clerk of the City of King, California, DO HEREBY CERTIFY that the foregoing is a true and accurate copy of the ordinance passed and adopted by the City Council of the City of King on the date and by the vote indicted herein.