Project Overview, Looking Northeast

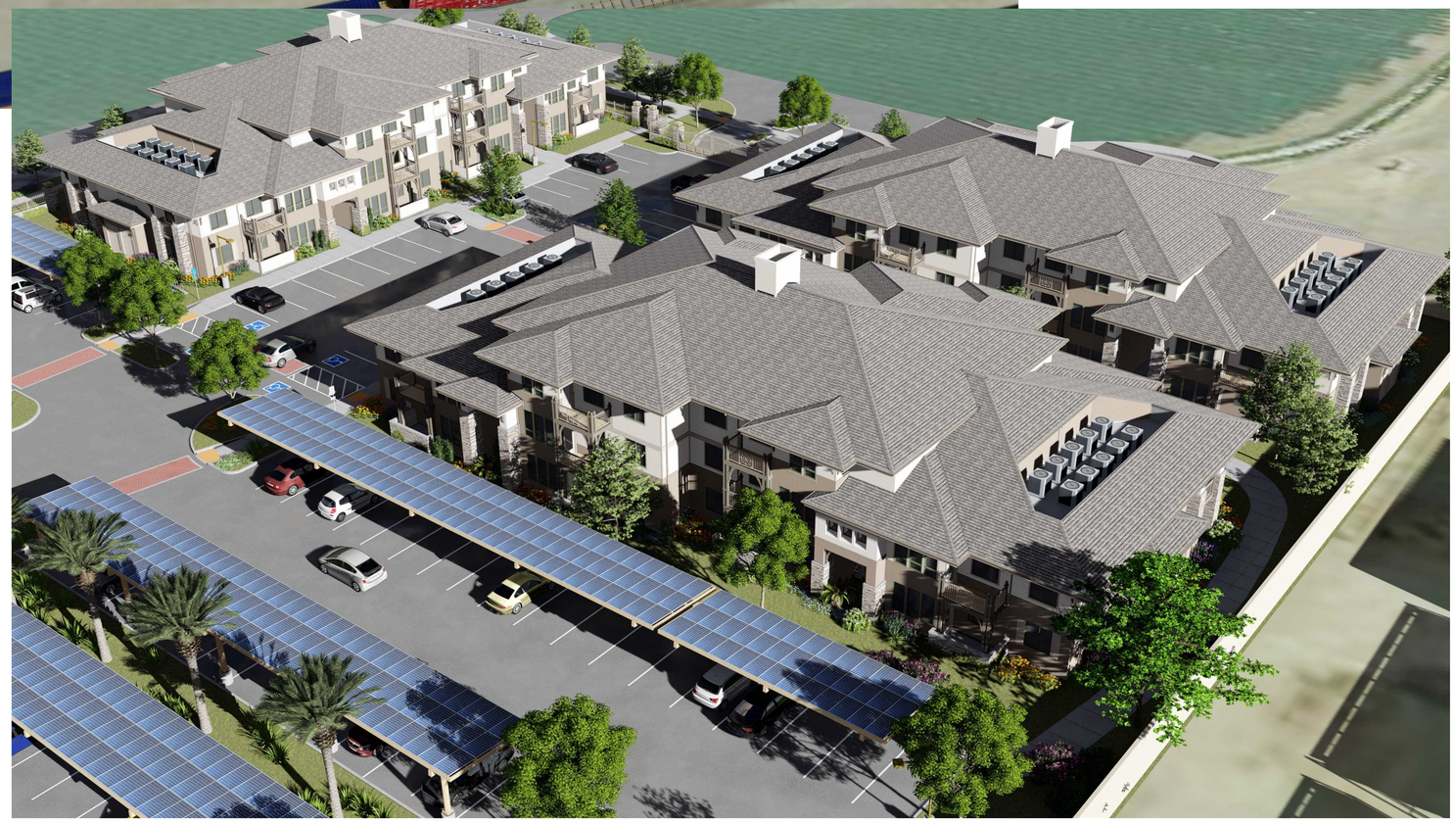

Buildings 4-6, Looking East

Note:
Plantings shown are illustrative only; see Landscape Drawing for intended planting locations and species.

Copyright © 2010

All ideas, designs, arrangements and plans indicated or represented by this drawing are owned by, and are the property of, NICHOLS, MELBURG and ROSSETTO and were created, evolved and developed for use on, and in conjuction with, the specified project. None of such ideas, designs, arrangements or plans shall be used by, or disclosed to any person, firm or corporation for any purpose whatsoever without the written permission of NICHOLS, MELBURG and ROSSETTO.

NICHOLS
MELBURG
&
ROSSETTO
ARCHITECTS + ENGINEERS

555 MAIN STREET, SUITE 300
CHICO, CA 95928
(530) 891-1710 (530) 891-0138 FAX
http://www.nmrdesign.com

CONSULTANTS

LICENSE STAMPS

LICENSED ARCHITECT
DAVID A. ROGERS
No. C26604
REN. 9-30-19
STATE OF CALIFORNIA

PROJECT NAME

Rava
RANCHES INC.

BITTERWATER/ CHESTNUT WORKFORCE HOUSING

LYONS ST. & CHESTNUT AVE.
KING CITY, CA 93930

SHEET TITLE

EXTERIOR PERSPECTIVE VIEWS

DRAWING STATUS

CONDITIONAL USE PERMIT

REVISIONS

Sym.	Description	Date

Drawn By	KAJ
Date Issued	2019-11-06
Scale	N.T.S.
Project No.	18-1765

SHEET No.

A401

Bitterwater Entrance, Looking South

Corner of Bitterwater & Chestnut, Looking South

Note:
Plantings shown are illustrative only; see Landscape Drawing for intended planting locations and species.

Copyright © 2010

All ideas, designs, arrangements and plans indicated or represented by this drawing are owned by, and are the property of, NICHOLS, MELBURG and ROSSETTO and were created, evolved and developed for use on, and in conjuction with, the specified project. None of such ideas, designs, arrangements or plans shall be used by, or disclosed to any person, firm or corporation for any purpose whatsoever without the written permission of NICHOLS, MELBURG and ROSSETTO.

NICHOLS
MELBURG
&
ROSSETTO
ARCHITECTS + ENGINEERS

555 MAIN STREET, SUITE 300
CHICO, CA 95928
(530) 891-1710 (530) 891-0138 FAX
http://www.nmrdesign.com

CONSULTANTS

LICENSE STAMPS

LICENSED ARCHITECT
DAVID A. ROGERS
No. C26604
REN. 9-30-19
STATE OF CALIFORNIA

PROJECT NAME

Rava
RANCHES INC.

BITTERWATER/ CHESTNUT WORKFORCE HOUSING

LYONS ST. & CHESTNUT AVE.
KING CITY, CA 93930

SHEET TITLE

EXTERIOR PERSPECTIVE VIEWS

DRAWING STATUS

CONDITIONAL USE PERMIT

REVISIONS

Sym.	Description	Date

Drawn By	KAJ
Date Issued	2019-11-06
Scale	N.T.S.
Project No.	18-1765

SHEET No.

A402

Overview of Building 2 & 3 Pedestrian "Mews" Entrance Garden, Looking Northeast

Pedestrian "Mews" Entrance Garden, Looking Northeast

Note:
Plantings shown are illustrative only; see Landscape Drawing for intended planting locations and species.

Copyright © 2010

All ideas, designs, arrangements and plans indicated or represented by this drawing are owned by, and are the property of, NICHOLS, MELBURG and ROSSETTO and were created, evolved and developed for use on, and in conjuction with, the specified project. None of such ideas, designs, arrangements or plans shall be used by, or disclosed to any person, firm or corporation for any purpose whatsoever without the written permission of NICHOLS, MELBURG and ROSSETTO.

NICHOLS
MELBURG
&
ROSSETTO
ARCHITECTS + ENGINEERS

555 MAIN STREET, SUITE 300
CHICO, CA 95928
(530) 891-1710 (530) 891-0138 FAX

http://www.nmrdesign.com

CONSULTANTS

LICENSE STAMPS

LICENSED ARCHITECT
DAVID A. ROGERS
No. C26604
REN. 9-30-19
STATE OF CALIFORNIA

PROJECT NAME

Rava
RANCHES INC.

BITTERWATER/ CHESTNUT WORKFORCE HOUSING

LYONS ST. & CHESTNUT AVE.
KING CITY, CA 93930

SHEET TITLE

EXTERIOR PERSPECTIVE VIEWS

DRAWING STATUS

CONDITIONAL USE PERMIT

REVISIONS

Sym.	Description	Date

Drawn By	KAJ
Date Issued	2019-11-06
Scale	N.T.S.
Project No.	18-1765

SHEET No.

A403

Overview of the North-South circulation spine, Looking Northwest

BBQ area and grass play area, Looking West

Note:
Plantings shown are illustrative only; see Landscape Drawing for intended planting locations and species.

Copyright © 2010

All ideas, designs, arrangements and plans indicated or represented by this drawing are and shall remain the property of NICHOLS, MELBURG and ROSSETTO and were created, evolved and developed for use on, and in conjuction with, the specified project. None of such ideas, designs, arrangements or plans shall be used by, or disclosed to any person, firm or corporation for any purpose whatsoever without the written permission of NICHOLS, MELBURG and ROSSETTO.

NICHOLS MELBURG & ROSSETTO
ARCHITECTS + ENGINEERS
555 MAIN STREET, SUITE 300
CHICO, CA 95928
(530) 891-1710 (530) 891-0138 FAX
http://www.nmrdesign.com

CONSULTANTS

LICENSE STAMPS

LICENSED ARCHITECT
DAVID A. ROGERS
No. C26604
REN. 9-30-19
STATE OF CALIFORNIA

PROJECT NAME

Rava RANCHES INC.

BITTERWATER/ CHESTNUT WORKFORCE HOUSING

LYONS ST. & CHESTNUT AVE.
KING CITY, CA 93930

SHEET TITLE

EXTERIOR PERSPECTIVE VIEWS

DRAWING STATUS

CONDITIONAL USE PERMIT

REVISIONS

Sym.	Description	Date

Drawn By	KAJ
Date Issued	2019-11-06
Scale	N.T.S.
Project No.	18-1765

SHEET No.

A404

PLANT SCHEDULE

TREES	BOTANICAL NAME	COMMON NAME	SIZE	QTY
	ARBUTUS X 'MARINA'	ARBUTUS STANDARD	15 GAL	3
	CARPINUS BETULUS 'FRANZ FONTAINE'	FRANZ FONTAINE HORNBEAM	15 GAL	8
	LAGERSTROEMIA INDICA 'RED ROCKET'	RED CRAPE MYRTLE	15 GAL	9
	LAGERSTROEMIA X 'NATCHEZ'	WHITE CRAPE MYRTLE	15 GAL	41
	MALUS X 'PRAIRIFIRE'	PRAIRIFIRE CRAB APPLE	15 GAL	20

PLANT SCHEDULE

TREES	BOTANICAL NAME	COMMON NAME	SIZE	QTY
	OLEA EUROPAEA 'WILSONII'	FRUITLESS WILSON OLIVE	15 GAL	21
	PISTACIA CHINENSIS 'KEITH DAVEY'	KEITH DAVEY CHINESE PISTACHE	15 GAL	21
	PLATANUS X ACERIFOLIA 'COLUMBIA'	LONDON PLANE TREE	15 GAL	4
	RHAPHIOLEPIS INDICA 'MAJESTIC BEAUTY' TM	MAJESTIC BEAUTY INDIAN HAWTHORNE STANDARD	15 GAL	12
	ZELKOVA SERRATA 'GREEN VASE'	SAWLEAF ZELKOVA	15 GAL	31

PALMS	BOTANICAL NAME	COMMON NAME	SIZE	QTY
	PHOENIX DACTYLIFERA	DATE PALM	15' BB	10

Copyright © ✉

All ideas, designs, arrangements and plans indicated or represented by this drawing are and shall remain the property of NICHOLS MELBURG and ROSSETTO and shall not be used in whole or in part, nor developed for use on and in conjunction with, the specified project. None of such ideas, designs, arrangements or plans shall be used by or disclosed to any person, firm or corporation for any purpose whatsoever without the written permission of NICHOLS MELBURG and ROSSETTO.

NICHOLS MELBURG & ROSSETTO
ARCHITECTS + ENGINEERS
300 KNOLLCREST DRIVE
REDDING, CA 96002
(530) 222-3300 (530) 222-3538 FAX
http://www.nmrdesign.com

CONSULTANTS

THOMAS H. PHELPS
LANDSCAPE ARCHITECTURE
THPLA, INC.
California Landscape Architect #4122
P.O.BOX 8328
Chico, CA 95927
(530)892-8897 fax (530)892-9588
thphelps@sbcglobal.net

LICENSE STAMPS

PROJECT NAME

BITTERWATER/ CHESTNUT WORKFORCE HOUSING

LYONS ST. & CHESTNUT AVE.
KING CITY, CA 93930

SHEET TITLE

LANDSCAPE PLAN

DRAWING STATUS

CONDITIONAL USE PERMIT

REVISIONS

Sym.	Description	Date

Drawn By	THP
Date Issued	2019-11-06
Scale	1"=20'
Project No.	18-1765

SHEET No.

L1

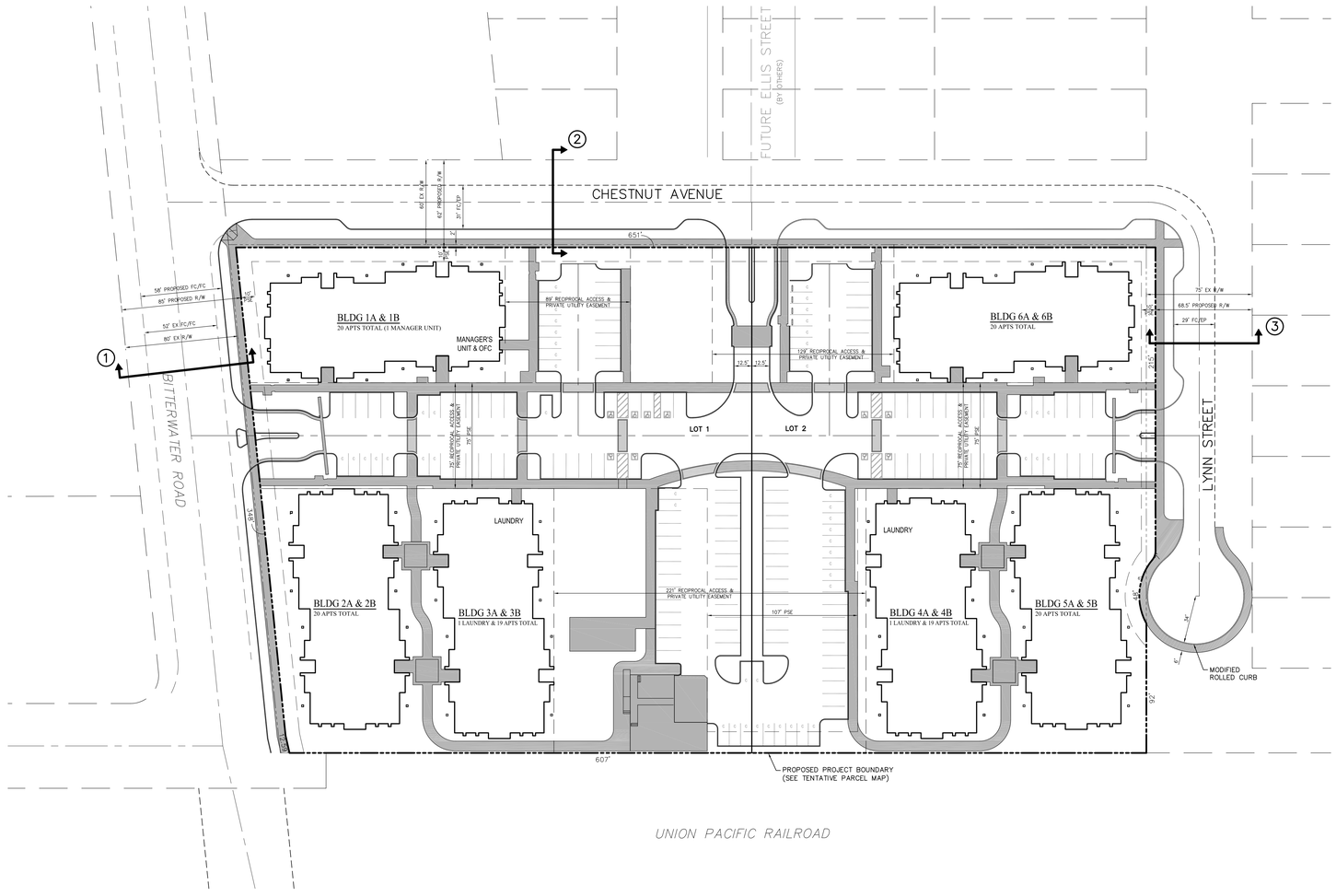

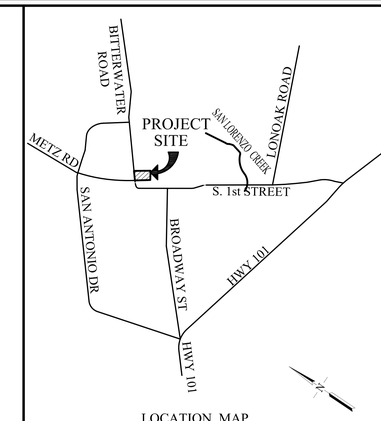

LOCATION MAP
NO SCALE

LEGEND

PROPOSED	DESCRIPTION	EXISTING
	PROJECT BOUNDARY	
	LOT LINE	
	RIGHT OF WAY (R/W)	
	CENTERLINE	
	CURB	
	SIDEWALK	
	EDGE OF PAVEMENT	
	RETAINING WALL	
	EASEMENT	
	ACCESSIBLE PARKING STALL	
	LOADING AND UNLOADING AREA	
	FUTURE CENTERLINE	
	FUTURE RIGHT OF WAY	

GENERAL NOTES

1. THE EXISTING TOPOGRAPHY, AS SHOWN, IS BASED ON AN AERIAL TOPOGRAPHIC SURVEY FLOWN ON APRIL 18, 2019.
2. BENCHMARK: NGS POINT "K 1441", PID "GU4131", LOCATED NEAR THE MESA DEL REY AIRPORT, 54 FEET NORTHWEST OF THE NORTH CORNER OF THE KING CITY AVIATION INCORPORATED BUILDING, 33 FEET NORTHWEST OF THE CENTER OF THE MAIN ENTRANCE ROAD, 1 FOOT SOUTHWEST OF A WITNESS POST, ELEVATION(NAVD88) = 371.23'.
3. FINAL PIPE SIZES, ELEVATIONS AND LENGTHS ARE SUBJECT TO CHANGE; TO BE CONFIRMED DURING FINAL DESIGN.
4. ALL WORK IS TO BE DONE IN COMPLIANCE WITH THE CITY OF KING SPECIFICATIONS, STANDARDS AND DESIGN CRITERIA.
5. ALL GRADING WILL BE DONE IN CONFORMANCE WITH THE RECOMMENDATIONS AND CONDITIONS OF THE GEOTECHNICAL ENGINEERING REPORT.
6. PROPOSED GRADES AND INVERT ELEVATIONS AS SHOWN ARE PRELIMINARY. FINAL GRADES AND INVERT ELEVATIONS ARE SUBJECT TO CHANGE AT FINAL DESIGN.
7. GRADING, SURFACE IMPROVEMENTS, AND UTILITIES ARE CONCEPTUAL AND ARE SUBJECT TO REVISION DURING FINAL DESIGN.
8. ALL EROSION CONTROL MEASURES SHALL BE IN CONFORMANCE WITH THE CRITERIA AND STANDARDS OF THE CITY OF KING.
9. THE PROJECT IS LOCATED IN THE FLOOD ZONE "X" PER FLOOD INSURANCE RATE MAP 06053C1103G, EFFECTIVE 4/2/2009.
10. ALL ABANDONMENTS WILL BE DONE WITH PROJECT PARCEL MAP(S), PER SECTION 66499.20.2 OF THE SUBDIVISION MAP ACT.

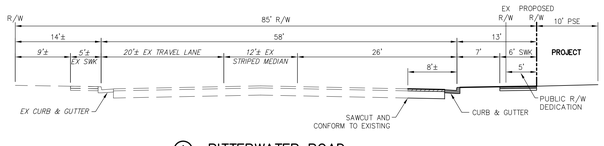

① BITTERWATER ROAD
NO SCALE

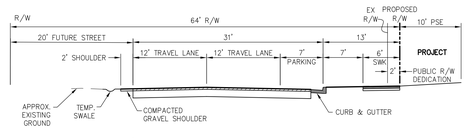

② CHESTNUT AVENUE
NO SCALE

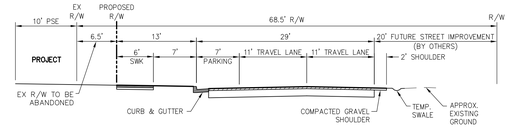

③ LYNN STREET
NO SCALE

0 40 80 120
SCALE IN FEET: 1" = 40'

RUGGERI-JENSEN-AZAR
ENGINEERS • PLANNERS • SURVEYORS
1055 CAMINO ARROYO GILROY, CA 95020
PHONE: (408) 848-0300 FAX: (408) 848-0302

CONDITIONAL USE PERMIT
CIVIL SITE PLAN
BITTERWATER/CHESTNUT WORKFORCE HOUSING
KING CITY, CALIFORNIA

FOR: FRESH FOODS

SCALE	DATE
1" = 40'	NOV 2019

DATE	MK	SHEET REVISIONS	BY	CK
		1ST SUBMITTAL NOVEMBER 2019		

SHEET
C1
OF 5 SHEETS

JOB NO.
192013

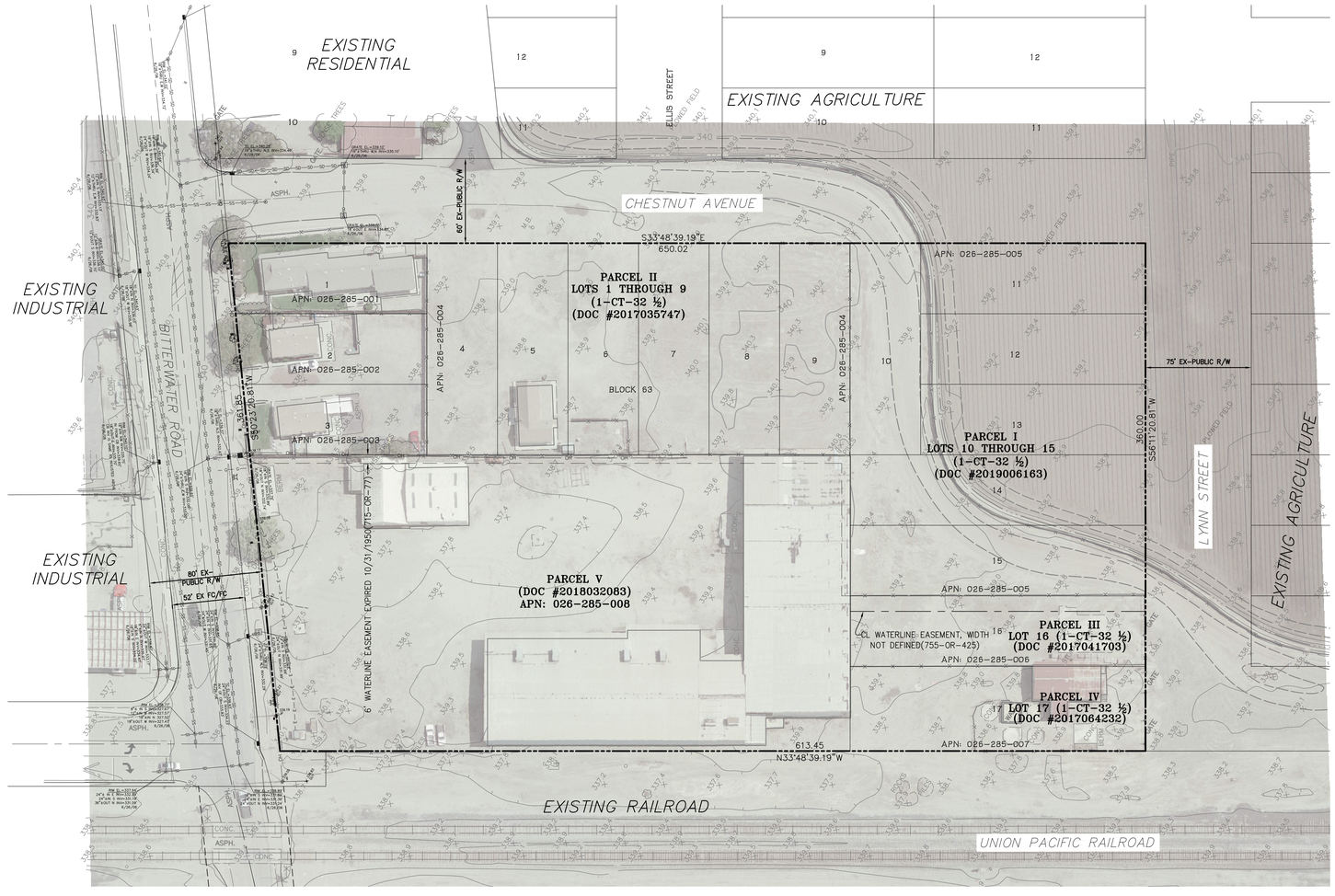

LEGEND

PROPOSED	DESCRIPTION	EXISTING
	PROJECT BOUNDARY	
	LOT LINE	
	CENTERLINE	
	CURB & GUTTER	
	SIDEWALK	
	OVERHEAD LINES	OH

NOTE:
1. ALL IMPROVEMENTS WITHIN THE PROJECT BOUNDARY TO BE REMOVED

0 40 80 120
SCALE IN FEET: 1"= 40'

RUGGERI-JENSEN-AZAR
8055 CAMINO ARROYO GILROY, CA 95020
PHONE: (408) 848-0300 FAX: (408) 848-0302

CONDITIONAL USE PERMIT
EXISTING CONDITIONS AND PRELIMINARY DEMOLITION PLAN
BITTERWATER/CHESTNUT WORKFORCE HOUSING
KING CITY, CALIFORNIA

FOR: FRESH FOODS

SCALE 1" = 40'
DATE NOV 2019

DATE	MK	SHEET REVISIONS	BY	CK
		1ST SUBMITTAL NOVEMBER 2019		

SHEET C2 OF 5 SHEETS

JOB NO. 192013

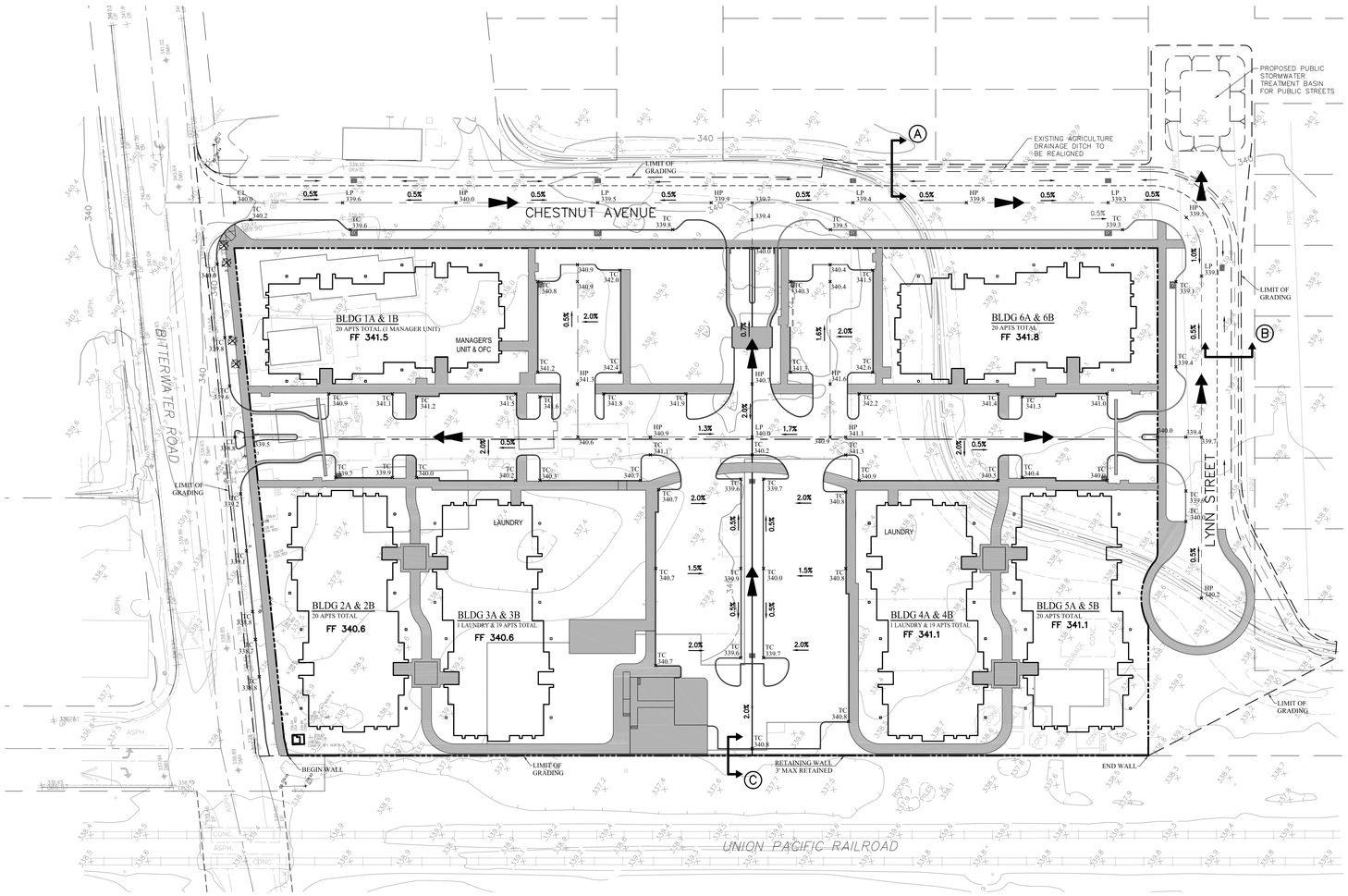

LEGEND

PROPOSED	DESCRIPTION	EXISTING
	PROJECT BOUNDARY	
	LOT LINE	
	CENTERLINE	
	CURB	
	SIDEWALK	
	EDGE OF PAVEMENT	
	RETAINING WALL	
	CONTOUR	350
	FLOWLINE	
	TOP AND TOE OF SLOPE	
	LIMIT OF GRADING	
OR FF 341.8	CATCH BASIN	
339.3	PAD ELEVATION	
OR	SPOT ELEVATION	
	DIRECTION OF SURFACE FLOW	×349.2
	OVERLAND DRAINAGE RELEASE	
	EXISTING TREE TO BE REMOVED	

GRADING NOTES

1. ALL PROPOSED GRADES SHOWN ARE PRELIMINARY AND SUBJECT TO REFINEMENT DURING FINAL DESIGN.

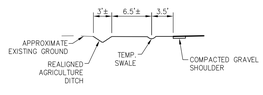

SECTION A
NO SCALE

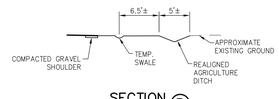

SECTION B
NO SCALE

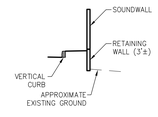

SECTION C
NO SCALE

0 40 80 120
SCALE IN FEET: 1"= 40'

RUGGERI-JENSEN-AZAR
8055 CAMINO ARROYO GILROY, CA 95020
PHONE: (408) 848-0300 FAX: (408) 848-0302

CONDITIONAL USE PERMIT
PRELIMINARY GRADING AND DRAINAGE PLAN
BITTERWATER/CHESTNUT WORKFORCE HOUSING
KING CITY, CALIFORNIA

FOR: FRESH FOODS

SCALE	DATE
1" = 40'	NOV 2019

DATE	MK	SHEET REVISIONS	BY	CK
		1ST SUBMITTAL NOVEMBER 2019		

SHEET
C3
OF 5 SHEETS

JOB NO.
192013

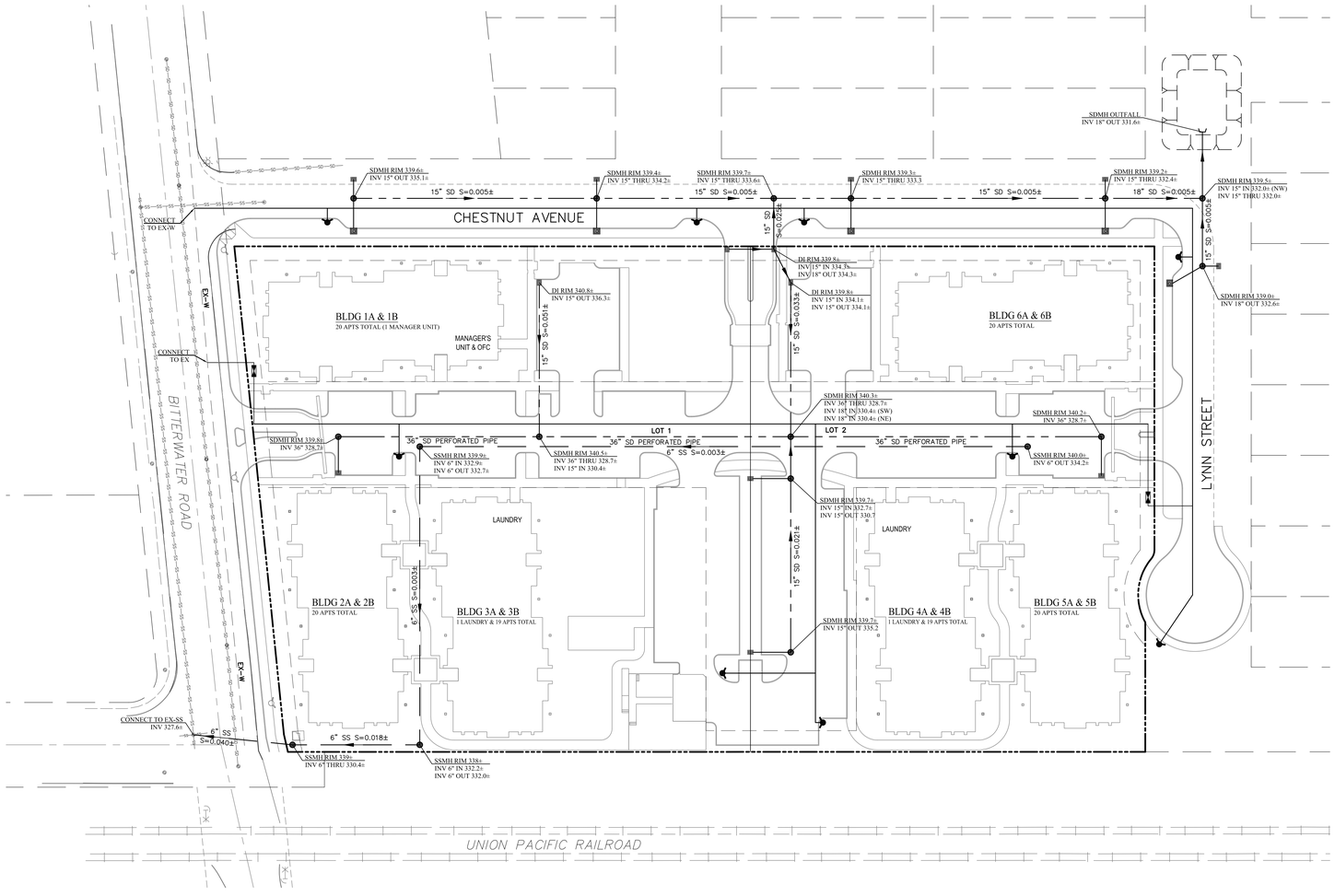

LEGEND

PROPOSED	DESCRIPTION	EXISTING
	PROJECT BOUNDARY	
	LOT LINE	
	EASEMENT	
	CURB	
	SIDEWALK	
	EDGE OF PAVEMENT	
SD	STORM DRAIN	SD
SS	SANITARY SEWER	SS
W	WATER	
	MANHOLE	OR
	DRAIN INLET (DI)	
	FIRE HYDRANT	
	DOUBLE DETECTOR CHECK VALVE	

0 40 80 120

SCALE IN FEET: 1"= 40'

RUGGERI-JENSEN-AZAR
8055 CAMINO ARROYO GILROY, CA 95020
PHONE: (408) 848-0300 FAX: (408) 848-0302

CONDITIONAL USE PERMIT
PRELIMINARY UTILITY PLAN
BITTERWATER/CHESTNUT WORKFORCE HOUSING
KING CITY, CALIFORNIA

FOR: FRESH FOODS

SCALE 1" = 40'
DATE NOV 2019

DATE	MK	SHEET REVISIONS	BY	CK
		1ST SUBMITTAL NOVEMBER 2019		

SHEET C4 OF 5 SHEETS

JOB NO. 192013

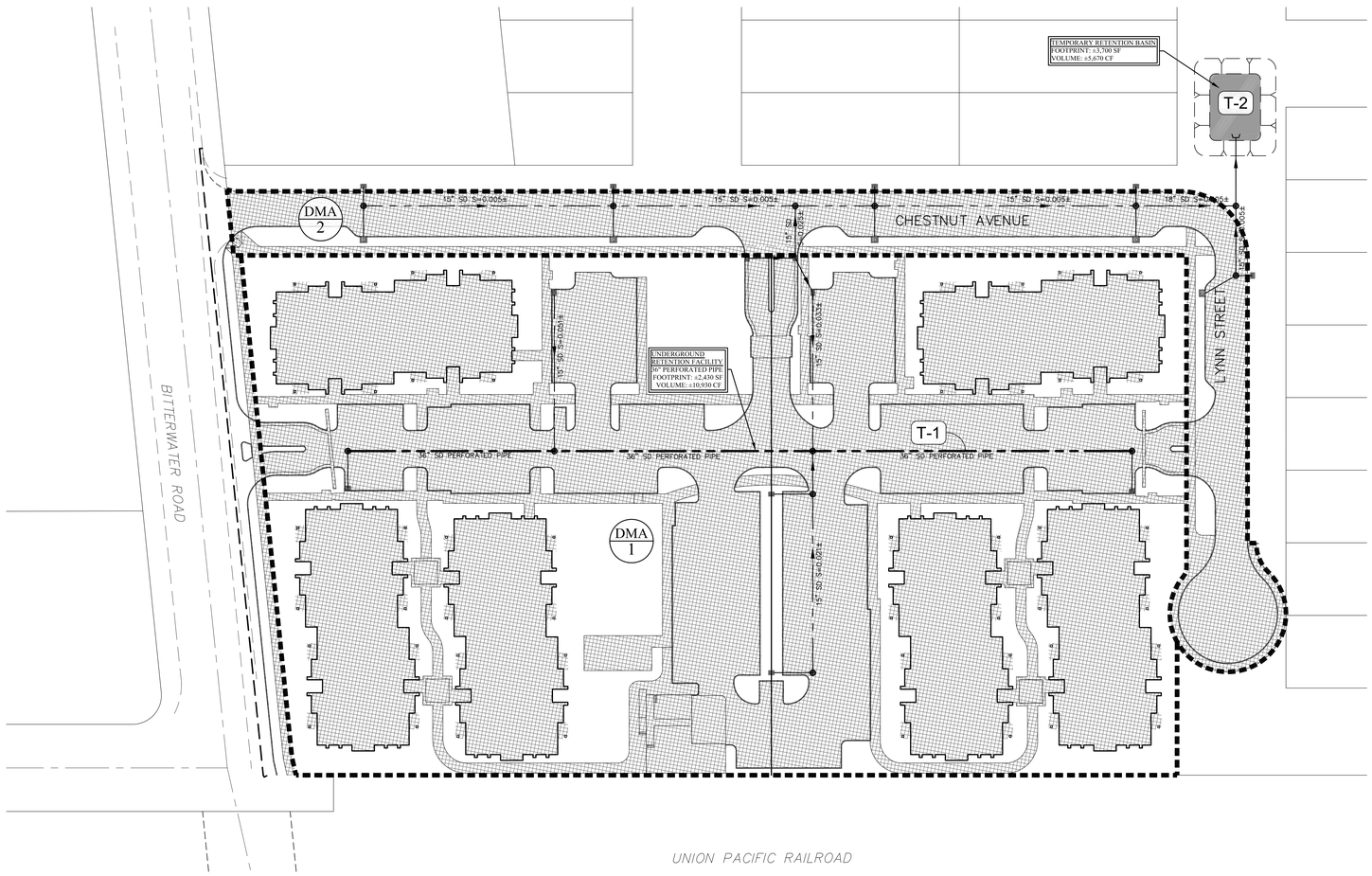

LEGEND

PROPOSED	DESCRIPTION
	DRAINAGE AREA BOUNDARY
	36" PERFORATED STORM DRAIN PIPE
	STORM DRAIN
	STORM DRAIN CURB INLET
	STORM DRAIN FIELD INLET
	IMPERVIOUS AREA
DMA 1	DRAINAGE MANAGMENT AREA ID
T-2	TREATMENT CONTROL MEASURE ID
	STORMWATER TREATMENT BASIN

PRELIMINARY STORMWATER TABLE

Project Name: Riva Ranches
Project Location: King City, CA
Date: November, 2019

Project Information

Area =	269,930	ft^2	*Total project area including public streets*
Existing Impervious Area =	50,180	ft^2	
	19%		*Existing Percent impervious area*
Ex Imperv Area To Remain =	0	ft^2	*Total existing impervious surface to remain*
Replaced Imperv Area =	50,180	ft^2	*Total existing impervious surface to be replaced as part of project*
New Imperv Area =	146,350	ft^2	*Total new impervious surface to be installed as part of project*
Total Impervious Area =	196,530	ft^2	*Total project impervious area*
	73%		*Percent impervious area*
Water Management Zone =	4		

Performance Requirements

No. 1 = Implement site design and runoff reduction strategies
No. 2 = Provide water quality treatment for 85% storm event
No. 3 = Prevent offsite discharge from events up to the 95th% storm event via optimizing infiltration
No. 4 = N/A- Water Management Zone 4 is exempt from peak flow management
No. 5 = N/A

Rainfall Design Information

MAP =		in	*Mean Annual Precipitation*
$P_{85\%}$ =	0.8	in	*85th% 24-hr rainfall depth*
$P_{95\%}$ =	1.2	in	*95th% 24-hr rainfall depth*
2-yr	1.70	in	*2-year 24-hr rainfall depth*
10-yr	3.00	in	*10-year 24-hr rainfall depth*
25-yr	3.79	in	*25-year 24-hr rainfall depth*
100-yr	5.02	in	*100-year 24-hr rainfall depth*

Soil Type Design Information

Site HSG =	C		*NRCS Hydrologic Soil Group Classification*
Infiltration Rate =	3.02	in/hr	*Lowest recorded percolation test at proposed elevation of underground retention facility, performed by Grice Engineering, November 2019*
Safety Facor =	2		
Design Infiltration Rate =	1.5	in/hr	

95% Rainfall Depth Runoff Retention Volume

		Impervious Surface (SF)		Pervious Surface (SF)						Runoff Rentention Volume Calculation				
DMA	Area (SF)	Total New and Replaced Impervious Surface	Replaced Impervious Surface (SF)	Managed Turf	Landscape/Grass	Pervious Concrete	Turf Block	Pavers	Total	Impervious Area Credit for Redevelopment (SF)	Drainage Area Minus Credit (SF)	% Impervious	Runoff Coefficient	95th% Volume, V_{95} (ft^3)
1	225,630	158,780	43,770		66,850				66,850	21,885	203,745	70%	0.50	10,135
2	44,300	37,750	6,410		6,550				6,550	3,205	41,095	85%	0.66	2,729
Total	269,930	196,530		0	73,400	0	0	0	73,400	25,090	244,840	73%	0.52	12,864

Notes:

1. SCM surface area for volume based facilities is based on the area at 1/3 depth to account for side slopes.
2. SCM sizing for the underground infiltration facility and 36" perforated storm drain pipe was done using the Hydrograph Routing Method in conjunction with CivilStormcomputer modeling software by Bentley Systems Inc.

Governing Equations:

$$V_{95} = \frac{C * P_{95} * A}{12}$$

V_{95} = *95% Rainfall Depth Runoff Retention Volume (ft^3)*
C = $0.858i^3 - 0.78i^2 + 0.774i + 0.04$
P_{95} = 1.20 *24-hr 95th percentile rainfall depth (in)*
A = *drainage area (ft^2)*
i = *% impervious*

$$Area = \frac{V_{95} * 12}{D_T + D_{BM} * R_{BM} + D_G * R_G}$$

Area = *Design SCM area based on 95% runoff retention volume (ft2)*
D = *SCM Layer depth (in)*
R = *SCM Layer porosity (in)*

$$T_D = \frac{V_{95} * 12 * SF}{I * Area}$$

T_D = *Drawdown time (hr)*
A = *Available SCM area (ft^2)*
I = 1.5 *Infiltration Rate (in/hr)*

Underground Retention Facility Volume Calculation

SCM Descritption	Length of Pipe (ft)	Total Footprint (ft^2)	Total Volume (ft^3)	Infiltration Flow Rate (cfs)	Drawdown Time (hr)
36" Perforated Pipe	540	2,430	10,935	0.08	36

Note:
The Underground Retention Facility was sized by applying the Hydrograph Routing Method, outlined in Appendix D of the CCRWQCB Reolution No. R3-2013-0032. An infiltration rate of 1.5 in/hr was used which refelects a factor of safety of 2.

Temporary Stormwater Retention/Detention Basin Summary

Infiltration Area = 1,600± ft^2
Total Detention Volume = 5,670± ft^3
Detention Basin Ponding Depth = 2.5 ft
Detention Basin Freeboard = 1.0 ft

Return Period	Allowable Outflow (cfs)	Peak Outflow (cfs)
95th %	0	0
2-yr	2.23	0
10-yr	5.39	4.98
25-yr	7.37	7.36
100-yr	10.46	10.26

GENERAL NOTES

1. THE PROJECT IS LOCATED IN THE CENTRAL COAST REGIONAL WATER QUALITY CONTROL BOARD (CCWQCB) JURISDICTION. STORM WATER RUNOFF MANAGEMENT SHALL ADHERE TO CCRWQCB RESOLUTION NO. R3-2013-0032 "POST-CONSTRUCTION STORMWATER MANAGEMENT REQUIREMENTS FOR DEVELOPMENT PROJECTS IN THE CENTRAL COAST REGION".
2. THIS STORM WATER RUNOFF MANAGEMENT PLAN IS CONCEPTUAL AND SUBJECT TO REVISION BASED ON FINAL DESIGN AND ULTIMATE SITE CONFIGURATION.
3. RETENTION FACILITIES WERE SIZED USING THE HYDROGRAPH ROUTING METHOD IN COMPLIANCE WITH ATTACHMENT D OF THE CCRWQCB RESOLUTION NO. R3-2013-0032.
4. ALL STORMWATER CALCULATIONS SHOWN HEREIN ARE PRELIMINARY AND SUBJECT TO CHANGE DURING FINAL DESIGN. THE LID MEASURES AND STORMWATER CONTROL FACILITIES MAY BE CHANGED OR MODIFIED DURING FINAL DESIGN AS LONG AS THE PROJECT CAN SHOW CONFORMANCE WITH THE CITY OF KING AND CCRWQCB POST-CONSTRUCTION STORMWATER REGULATIONS IN EFFECT AT THE TIME OF THE PROJECT APPROVAL.
5. THE 36" PERFORATED STORM DRAIN SERVES AS THE MAIN DETENTION/RETENTION FACILITY FOR THE ON-SITE PROJECT. THE FACILITY WAS SIZED TO RETAIN THE 95% STORM VIA THE ROUTING METHOD USING CIVILSTORM COMPUTER PROGRAM BY BENTLEY SYSTEM INCORPORATED.
6. THE PROJECT SITE IS LOCATED WITHIN WATER MANAGEMENT ZONE 4. ZONE 4 IS EXEMPT FROM PEAK FLOW MANAGEMENT REQUIREMENTS PER CCRWQB RESOLUTION NO. R3-2013-0032. HOWEVER, THE PROJECT COMMITS TO NOT EXCEED PRE-PROEJCT PEAK FLOWS FOR THE 2-YEAR THOUGH 100-YEAR STORM EVENTS.
7. A TEMPORARY RETENTION/DETENTION BASIN WILL BE RPOVIDED FOR OFFSITE AREAS. THE BASIN RETAINS UP TO THE 2-YEAR STORM EVENT AND DETAINS OFFSITE AND ONSITE PEAK FLOWS FROM EXCEEDING PRE-DEVELOPMENT PEAK FLOWS FOR THE 2-YEAR THROUGH 100-YEAR STORM EVENTS. THE BASIN DISCHARGES TO AN EXISTING AGRICULTURAL DRAINAGE DITCH THAT IS BEING REALIGNED AS A PART OF THIS PROJECT. UPON BUILD OUT OF THE KING CITY DOWNTOWN ADDITION (KCDA) SPECIFIC PLAN, THE BASIN WILL BE REMOVED AND A STORM DRAIN SYSTEM WILL BE INSTALLED TO CONVEY RUNOFF TO THE ULTIMATE BASIN LOCATION AS SHOWN IN THE KCDA SPECIFIC PLAN.
8. STORMWATER PEAK FLOWS WERE CALCULATED USING CIVIL STORM COMPUTER PROGRAM BY BENTLEY SYSTEM INCORPORATED. THE CCWQCB RAINFALL DEPTH MAPS AND NOAA ATLAS 14 WERE USED TO DETERMINE THE RAINFALL DEPTHS. THE NRCS RAINFALL DISTRIBUTION FOR CALIFORNIA (REGION CA-5) WAS USED FOR THE 24-HOUR RAINFALL PATTERN. THE NRCS CURVE NUMBER METHOD WAS USED TO ESTIMATE RUNOFF.

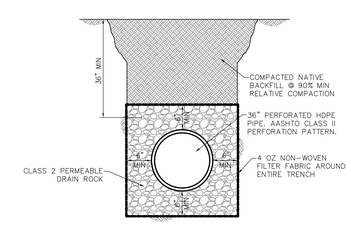

PERFORATED PIPE TRENCH DETAIL
NO SCALE

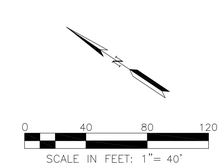

RUGGERI-JENSEN-AZAR
8055 CAMINO ARROYO GILROY, CA 95020
PHONE: (408) 848-0300 FAX: (408) 848-0302

CONDITIONAL USE PERMIT
PRELIMINARY STORM WATER CONTROL PLAN
BITTERWATER/CHESTNUT WORKFORCE HOUSING
KING CITY, CALIFORNIA

FOR: FRESH FOODS

SCALE 1" = 40'
DATE NOV 2019

DATE	MK	SHEET REVISIONS	BY	CK
		1ST SUBMITTAL NOVEMBER 2019		

SHEET C5 OF 5 SHEETS

JOB NO. 192013

LIGHTING FIXTURE SCHEDULE NOTES:

A. GENERAL NOTES:

1. THE LIGHTING FIXTURES, LAMPS, BALLASTS, POWER SUPPLIES, DRIVERS AND TRANSFORMERS FOR THIS PROJECT HAVE BEEN SPECIFIED TO ENSURE THAT SPECIFIC AESTHETIC AND PERFORMANCE REQUIREMENTS WILL BE SATISFIED. THESE PRODUCTS HAVE BEEN CAREFULLY RESEARCHED AND EACH SPECIFIED ITEM HAS UNIQUE QUALITIES WHICH WERE DETERMINED TO BE ESSENTIAL IN SATISFYING THE OWNER'S, ARCHITECT'S, ENGINEER'S AND LIGHTING CONSULTANT'S DESIGN CRITERIA.
2. CONTRACTOR SHALL PROVIDE ALL MATERIALS AS DETAILED ON DRAWINGS AND/OR SCHEDULES, AND LABOR AS REQUIRED TO ACHIEVE A COMPLETE AND OPERATING LIGHTING SYSTEM.
3. CONTRACTOR SHALL NOTIFY THE ELECTRICAL ENGINEER AND/OR LIGHTING CONSULTANT OF ANY PROVISIONS OF THE SPECIFICATION THAT IS IN CONFLICT WITH LOCALLY ENFORCED CODES.
4. CONTRACTOR SHALL IMMEDIATELY NOTIFY THE ARCHITECT OF ANY REQUIRED MODIFICATIONS THAT ARE NOT SHOWN ON THE DRAWINGS.
5. ALL ELECTRICAL MATERIAL SHALL BE IN NEW & UNDAMAGED CONDITION WHEN INSTALLED. ALL EQUIPMENT SHALL BE LISTED BY A NATIONALLY RECOGNIZED TESTING LABORATORY.
6. ALL DIMENSIONS & MEASUREMENTS FOUND ON PLANS ARE APPROXIMATE. CONTRACTOR SHALL VALIDATE ALL DIMENSIONS PRIOR TO ORDERING MATERIAL TO INCLUDE MAKING FIELD MEASUREMENTS BASED ON ACTUAL SITE CONDITIONS TO DEVELOP COMPLETE ORDERS AND INSTALL SYSTEMS PER DRAWINGS AND SPECIFICATIONS.
7. REFER TO ARCHITECTURAL PLANS FOR EXACT LOCATION AND ELEVATION OF ALL LIGHTING FIXTURES AND ASSOCIATED DEVICES AND EQUIPMENT.
8. PRIOR TO AIMING/ADJUSTING ACTIVITIES, COMMISSIONING OR PUNCHWALK COMMENCEMENT, CONTRACTOR SHALL PROPERLY TEST AND VERIFY ALL CIRCUITRY AND CONTROL WIRING AND IMPLEMENT ALL CONTROLS PROGRAMMING.

B. INSTALLATION:

1. LOCATIONS OF THE FIXTURES SHALL BE PER THE ARCHITECTURAL REFLECTED CEILING PLAN(S) AND SHALL BE COORDINATED AT TIME OF ROUGH IN. CONFLICTS BETWEEN THE ARCHITECTURAL REFLECTED CEILING PLAN(S) AND THE ELECTRICAL/LIGHTING DESIGN PLAN(S) SHALL BE BROUGHT TO THE ATTENTION OF THE ARCHITECT IN WRITING PRIOR TO ORDERING FIXTURES.
2. LIGHTING DRAWINGS REPRESENT THE DESIGN INTENT OF THE EQUIPMENT, DEVICES, ETC. TO BE CONNECTED AND THE CIRCUITS TO WHICH THEY ARE TO BE CONNECTED. CONTRACTOR SHALL INSTALL ALL CONDUIT, J-BOXES AND ADDITIONAL HARDWARE AND DEVICES AS REQUIRED FOR A COMPLETE AND OPERATING SYSTEM.
3. ALL LIGHTING FIXTURES SHALL BE MOUNTED AND INDIVIDUALLY SUPPORTED IN ACCORDANCE WITH APPLICABLE CODES. FIXTURES SHALL BE FURNISHED AND INSTALLED WITH ALL REQUIRED MOUNTING DEVICES, HARDWARE AND ACCESSORIES.
4. CONTRACTOR TO VERIFY LIGHTING FIXTURE MOUNTING HARDWARE IS COMPATIBLE WITH APPROVED MOUNTING CONDITIONS. MOUNTING CONDITIONS MUST ALLOW FOR AIMING AND ADJUSTING OF LIGHTING FIXTURES ON SITE.
5. CONTRACTOR TO INCLUDE AIMING/ADJUSTING LABOR AFTER DARK AS REQUIRED FOR ANY ADJUSTABLE LIGHTING FIXTURE AND FOR EACH INDIVIDUAL LIGHTING FIXTURE HEAD OR LAMP HOLDER IN A MULTI-FIXTURE/MULTI-LAMP ASSEMBLY. LIGHTING FIXTURES TO BE AIMED/ADJUSTED PER THE DIRECTION OF OWNER, ARCHITECT AND/OR LIGHTING CONSULTANT.
6. CONTRACTOR TO SUPPLY ADEQUATE SUPPORT INCLUDING LADDERS, LIFTS OR OTHER EQUIPMENT REQUIRED TO ACCESS LIGHTING FIXTURES AT THE TIME OF FOCUS, INCLUDING EVENING OR NIGHT WORK AS MAY BE REQUIRED DUE TO SCHEDULE CONFLICT OR DAYLIGHT IMPACT. AIMING/ADJUSTING LABOR SHALL BE PREPARED FOR WORK WITH COMMON HAND TOOLS TO MAKE ADJUSTMENTS AND MINOR REPAIRS DURING AIMING.
7. ALL COVE MOUNTED LIGHTING FIXTURES SHALL EXTEND THE FULL LENGTH OF THE COVE. CONTRACTOR TO FIELD MEASURE COVE LENGTH AND ORDER QUANTITY OF LIGHTING FIXTURES AS REQUIRED. PROVIDE COMPLETE MANUFACTURER SHOP DRAWINGS OF BUILT-IN COVE OR LINEAR LIGHTING SYSTEMS.
8. CONTRACTOR TO REPLACE ALL INOPERATIVE LAMPS, LED ARRAYS OR SYSTEMS AT THE END OF THE CONSTRUCTION PHASE PRIOR TO THE FOCUS AND PROGRAMMING PHASE AND AGAIN PRIOR TO OWNER OCCUPANCY OR PROJECT OPENING.
9. ALL POLE MOUNTED FIXTURES, POST MOUNTED FIXTURES AND BOLLARDS SHALL BE PROVIDED WITH A STRUCTURAL FOOTING AS DETAILED ELSEWHERE IN THE DRAWINGS. FOOTING SIZE TO BE PROVIDED BY STRUCTURAL ENGINEER. REFERENCE FIXTURE SCHEDULE AND DETAILS FOR MORE INFORMATION.
10. ALL EXIT SIGNS SHALL BE INSTALLED IN STRICT ACCORDANCE WITH THE LOCAL FIRE PREVENTION CODE AUTHORITY. THE CONTRACTOR IS RESPONSIBLE FOR PROVIDING ALL NECESSARY HARDWARE SUCH THAT ALL EXIT SIGNS ARE INSTALLED IN AN APPROVED VISIBLE LOCATION. THE CONTRACTOR SHALL VERIFY CHEVRONS AND NUMBER OF FACES PER EXIT SIGN WITH ARCHITECTURAL REFLECTED CEILING PLAN(S). ANY DISCREPANCIES BETWEEN EXIT SIGNS DEPICTED ON ARCHITECTURAL AND ELECTRICAL PLANS SHALL BE BROUGHT TO THE ATTENTION OF THE ARCHITECT PRIOR TO ORDERING EXIT SIGNS.

C. SUBMITTALS AND SUBSTITUTIONS:

1. CONTRACTOR TO SUBMIT FOR APPROVAL ON THE PRODUCTS THEY INTEND TO FURNISH WITHIN TEN (10) DAYS OF AWARD OF CONTRACT. FAILURE TO SUBMIT WITHIN DEADLINE CONSTITUTES A GUARANTEE THAT ONLY THE BASE SPECIFIED PRODUCTS WILL BE SUPPLIED AND THAT NO OTHER PRODUCTS, WHETHER LISTED AS ALTERNATES OR NOT, WILL BE CONSIDERED.
2. CONTRACTOR TO PROVIDE A SUBMITTAL/SHOP DRAWING SUBMITTAL FOR EACH LIGHTING FIXTURE TYPE INCLUDING ACCESSORIES, BALLAST(S), POWER SUPPLIES, DRIVER(S) TRANSFORMER(S), AND INTEGRAL EMERGENCY BATTERIES AND TEST SWITCHES. ANY LIGHTING FIXTURE SUBMITTAL PROVIDED WITHOUT SPECIFIC LIGHTING FIXTURE'S ACCESSORIES, BALLAST, POWER SUPPLY, DRIVER, TRANSFORMER OR BATTERY INFORMATION SHALL BE REJECTED AS INCOMPLETE.
3. SUBSTITUTIONS OF THE SPECIFIED PRODUCTS ARE STRICTLY PROHIBITED – UNLESS APPROVED AS STATED HEREIN. LIGHTING FIXTURE SUBSTITUTIONS SHALL BE FORMALLY PRESENTED TO THE ELECTRICAL ENGINEER AND/OR LIGHTING CONSULTANT, BY APPOINTMENT ONLY, AT LEAST TEN (10) WORKING DAYS PRIOR TO BID TIME. THE SUBMITTAL MATERIAL SHALL INCLUDE THE FOLLOWING ITEMS.
   a. A COMPLETE AND OPERATING SAMPLE, WIRED FOR 120V OPERATION, WITH LAMP, CORD AND PLUG.
   b. A COMPLETE PHOTOMETRIC REPORT, FOR THE PROPOSED SUBSTITUTE PRODUCT, USING THE SPECIFIED LAMP OR LED TYPE AND WATTAGE, INCLUDING TABULATED CANDLEPOWER VALUES, COEFFICIENT OF UTILIZATION, AND AN ISO-FOOT-CANDLE DIAGRAM. PRORATED DATA WILL NOT BE ACCEPTABLE. THE PHOTOMETRIC REPORT MUST BE DONE IN ACCORDANCE WITH PUBLISHED I.E.S. TESTING PROCEDURES AND CERTIFIED BY A REGISTERED ELECTRICAL ENGINEER.
   c. A CURRENT ORIGINAL CATALOG DATA SHEET WITH LIGHTING FIXTURE CATALOG NUMBERS. MODIFIED DATA SHEETS WILL NOT BE ACCEPTABLE.
   d. A SIGNED COPY OF THE "SUBSTITUTION COMPLIANCE FORM", LOCATED IN THE DIVISION 1 SPECIFICATION, STATING THAT IF THE PROPOSED SUBSTITUTION IS ACCEPTED, THE PROJECT SCHEDULE WILL NOT BE NEGATIVELY AFFECTED. IF THE COMPLETION OF THE PROJECT IS DELAYED BECAUSE OF THE APPROVED SUBSTITUTION, THE CONTRACTOR WILL BE RESPONSIBLE FOR PAYMENT OF ANY ESTABLISHED LIQUIDATED DAMAGES.
   e. FOR SPECIFIC INTERIOR FIXTURE SUBSTITUTIONS, WHEN DIRECTED BY THE ELECTRICAL ENGINEER AND/OR LIGHTING CONSULTANT, A POINT-BY-POINT SCALED COMPUTER PRINTOUT SHALL BE PROVIDED VERIFYING THE ILLUMINATION LEVELS FOR THE SPECIFIC INTERIOR AREA. IF THE SUBSTITUTED FIXTURE IS AN EMERGENCY FIXTURE, THE REPORT SHALL BE RUN IN BOTH NORMAL AND EMERGENCY MODES. THIS REPORT SHALL BE CONFIGURED WITH SPECIFIC CONSTRAINTS, AS DIRECTED BY THE ENGINEER OF RECORD. THE REPORT MUST SHOW THAT THE SUBSTITUTED FIXTURE PROVIDES PERFORMANCE EQUAL TO OR BETTER THAN THE LIGHTING LEVELS OF THE SPECIFIED PRODUCT.
   f. FOR ALL EXTERIOR FIXTURE SUBSTITUTIONS, A POINT-BY-POINT SCALED COMPUTER PRINTOUT SHALL BE PROVIDED VERIFYING THE ILLUMINATION LEVELS FOR THE ENTIRE SITE PLAN BASED ON USING THE PROPOSED ALTERNATIVE FIXTURES. THE REPORT MUST SHOW THAT THE SUBSTITUTED FIXTURE PROVIDES PERFORMANCE EQUAL TO, OR BETTER THAN THE LIGHTING LEVELS AND UNIFORMITY RATIOS (MAX:MIN AND AVG:MIN) OF THE SPECIFIED PRODUCT. THIS REPORT SHALL BE CONFIGURED WITH THE FOLLOWING CONSTRAINTS.
      i. THE SPACING INCREMENT OR POINTS ON THE VERIFICATION REPORT SHALL NOT EXCEED TEN (10) FEET IN EITHER DIRECTION.
      ii. THE PHOTOMETRIC CALCULATION SHALL BE BASED ON PROVIDING MAINTAINED FOOT-CANDLE LEVELS USING MEAN LAMP LUMENS AND A LIGHT LOSS FACTOR, AS DIRECTED BY THE ENGINEER OF RECORD.
      iii. THE PHOTOMETRIC CALCULATION SHALL SHOW ANY ADDITIONAL ENERGY AND/OR ENERGY COSTS, FOR A TEN YEAR PERIOD, AS COMPARED TO THE ORIGINALLY SPECIFIED ITEM. THE TOTAL COSTS FOR THESE EXPENSES WILL BE DEDUCTED FROM THE CONTRACT COST.
4. CONFLICTS BETWEEN CATALOG NUMBERS AND LIGHTING FIXTURE DESCRIPTIONS SHALL BE BROUGHT TO THE ATTENTION OF THE ELECTRICAL ENGINEER AND/OR LIGHTING CONSULTANT PRIOR TO BID TIME FOR CLARIFICATION.
5. FIXTURE FINISHES:
   a. ALL FIXTURE FINISHES AND COLORS, UNLESS NOTED AS CUSTOM, SHALL BE SELECTED FROM THE MANUFACTURERS STANDARD COLOR OPTIONS AS LISTED ON THE FIXTURE SPECIFICATION SHEET. STANDARD FINISH SHALL BE SELECTED BY THE ARCHITECT, INTERIOR DESIGNER OR OWNER. THIS DIRECTION WILL BE PROVIDED IN THE SHOP DRAWING REVIEW PROCESS.
   b. ALL FIXTURES INDICATED WITH A PREMIUM OR CUSTOM COLOR SHALL BE ASSIGNED A CUSTOM COLOR REFERENCE NUMBER (SUCH AS RAL#) OR PROVIDE FIVE (5) PAINT CHIPS FOR MANUFACTURER TO USE TO MATCH COLOR. PREMIUM OR CUSTOM FINISH SHALL BE SELECTED BY THE ARCHITECT, INTERIOR DESIGNER OR OWNER. THIS DIRECTION WILL BE PROVIDED IN THE SHOP DRAWING REVIEW PROCESS.
6. [OPTION?] IN THE LIGHTING FIXTURE MODEL NUMBER INDICATE A FIXTURE OPTION THAT THE CONTRACTOR MUST IDENTIFY PRIOR TO ORDERING/PROVIDING SUBMITTALS, INCLUDING, BUT NOT LIMITED TO: VOLTAGE, MOUNTING CONDITION/HARDWARE, FINISH, DIMMING REQUIREMENTS/BALLAST INFORMATION.
   a. CONTRACTOR SHALL BE RESPONSIBLE FOR VERIFYING AND PROVIDING ALL HANGERS, CLIPS AND NECESSARY HARDWARE TO INSTALL THE FIXTURE IN THE ENVIRONMENT AS SHOWN ON THE ARCHITECTURAL PLANS. ALL FIXTURES SHALL BE PROVIDED WITH ALL REQUIRED STRUCTURAL SUPPORTS AS REQUIRED BY THE CURRENTLY ADOPTED CODES.
   b. VOLTAGES SHALL BE VERIFIED BY THE CONTRACTOR PRIOR TO ORDERING – SEE ELECTRICAL DRAWINGS FOR BRANCH CIRCUIT INFORMATION. IT IS POSSIBLE THAT FIXTURES WILL BE REQUIRED IN VARIOUS VOLTAGES
7. "NO KNOWN EQUAL" LIGHTING FIXTURE PRICING/BIDDING NOTES:
   a. EACH FIXTURE IDENTIFIED AS "NO KNOWN EQUAL" ON THIS PROJECT SHALL BE BID IN A "LINE ITEM" FORMAT. A PER UNIT MATERIAL COST SHALL BE PROVIDED FOR EACH "NO KNOWN EQUAL" FIXTURE. THIS PRICE SHALL INCLUDE LAMPS AS WELL AS ALL OTHER REQUIRED MATERIALS REQUIRED FOR INSTALLATION. THE FIXTURE PRICE QUOTED WILL BE UTILIZED, PRIOR TO SHOP DRAWING APPROVAL, FOR "ADDING" AND/OR "DELETING" ANY QUANTITY OF THE FIXTURE.
   b. A UNIT COST SHALL BE SUBMITTED FOR EACH "NO KNOWN EQUAL" FIXTURE. SUBMIT THE PRICING AS PART OF THE BID FORM ON A SEPARATE 8 1/2" X 11" SHEET.
   c. FAILURE TO SUBMIT A LINE ITEM FOR EACH "NO KNOWN EQUAL" FIXTURE MAY RESULT IN THE REJECTION, REFUSAL, OR NON-ACCEPTANCE OF THE CONTRACTOR'S BID.
8. FIXTURES IDENTIFIED AS "NO KNOWN EQUAL – OWNER STANDARD" OR "CAMPUS STANDARD" ARE TO BE PROVIDED AS SPECIFIED, WITH SUBSTITUTIONS STRICTLY PROHIBITED. SEE ADDITIONAL NOTES FOR "NO KNOW EQUAL" BIDDING REQUIREMENTS.

D. LIGHTING FIXTURE SPECIFICATIONS:

1. ALL EXTERIOR LIGHTING EQUIPMENT SHALL BE RATED FOR WET LOCATION AND THE IP RATING OF ALL EQUIPMENT, INCLUDING BALLAST, POWER SUPPLY AND TRANSFORMER ENCLOSURES SHALL CONFORM TO THE CONDITIONS IN WHICH THE LIGHTING FIXTURE IS MOUNTED.
2. ALL BALLASTS, POWER SUPPLIES, DRIVERS AND/OR TRANSFORMERS THAT ARE REMOTELY LOCATED SHALL BE INSTALLED AS NEAR TO THE LIGHTING FIXTURE(S) AS POSSIBLE, HIDDEN FROM PUBLIC VIEW IN AN ACCESSIBLE COMPARTMENT THAT IS WELL VENTILATED. CONTRACTOR TO COORDINATE LOCATION(S) WITH ARCHITECT PRIOR TO ROUGH-IN.
3. ALL TRANSFORMERS SHALL BE FUSED ON THE SECONDARY SIDE.
4. COLOR FILTERS SHALL BE GLASS OR DICHROIC UNLESS OTHERWISE INDICATED ON DRAWINGS.
5. CONTRACTOR TO PROVIDE 20% ADDITIONAL COLOR FILTERS FOR EACH COLOR AND SIZE.
6. CONTRACTOR TO VERIFY THAT ALL LIGHTING FIXTURES SPECIFIED WITH A COLOR FILTER ARE SUPPLIED WITH ANY AND ALL ATTACHMENT DEVICES FOR THE FILTER.
7. ALL TRACK LIGHTING FIXTURES SHALL BE PROVIDED WITH THE APPROPRIATE TRACK SYSTEM WHICH SHALL INCLUDE ALL MISCELLANEOUS COMPONENTS REQUIRED, AS WELL A ANY REQUIRED CIRCUIT LIMITERS FOR A COMPLETE INSTALLATION. TRACK LENGTH(S) SHALL BE PER DRAWINGS.

E. DRIVERS / TRANSFORMERS:

1. [OPTION?] IN FIXTURE MODEL NUMBER INDICATE THAT THE FIXTURE DRIVER TYPE AND QUANTITY MUST BE VERIFIED BY THE CONTRACTOR – USING FIXTURE CALLOUT INFORMATION AND FIXTURE SWITCHING CONFIGURATION INFORMATION.
2. CONTINUOUS DIMMING AND CONTROLLABLE LED:
   a. PROVIDE CONTROLLABLE LED DIMMING DRIVERS (INTEGRAL OR REMOTE) WITH POWER FACTOR GREATER THAN 0.85 AND MAXIMUM THD OF 20% AT FULL LOAD.
   b. PRIOR TO BID CONTRACTOR TO VERIFY DRIVER COMPATIBILITY WITH DIMMERS, DIMMING CONTROL SYSTEM(S) AND LIGHTING CONTROL SYSTEM(S) WITH RESPECTIVE LIGHTING MANUFACTURER(S) AND LIGHTING/DIMMING CONTROL SYSTEM MANUFACTURERS. IF COMPATIBILITY DOCUMENTATION IS UNAVAILABLE FOR A GIVEN LED FIXTURE/LIGHTING CONTROL SYSTEM COMBINATION, CONTRACTOR SHALL INCLUDE COSTS IN THE BASE BID FOR RESPECTIVE LIGHTING MANUFACTURER AND LIGHTING CONTROLS MANUFACTURER TO TEST/WARRANT COMPATIBILITY OF SAID COMBINATIONS.
   c. CONTINUOUS LED DIMMING DRIVERS SHALL BE AT MINIMUM 4-WIRE 0-10V 10% DIMMING (HOT, NEUTRAL, DIM+, DIM-). THE FIXTURE PART NUMBER SHOULD INDICATE THE TYPE OF DIMMING PROTOCOL REQUIRED.
   d. THE FIXTURE PART NUMBER SHOULD INDICATE THE TYPE OF DIMMING PROTOCOL REQUIRED.

F. EMERGENCY FIXTURES / BATTERY PACKS:

1. LIGHT FIXTURES INDICATED AS EMERGENCY SHALL BE IDENTIFIED / PROVIDED AS FOLLOWS:
   a. INTEGRAL BATTERY PACK (EB):
      3a/3EB – FIXTURE CONNECTED TO CIRCUIT "3", CONTROL SWITCHLEG "a" – WITH THE BATTERY CHARGING LEAD CONNECTED TO A CONSTANT HOT CIRCUIT "3".
      3NL/3EB – FIXTURE CONNECTED TO A CONSTANT HOT CIRCUIT "#3". BATTERY CHARGING LEAD CONNECTED TO A CONSTANT HOT CIRCUIT "3".
   b. REMOTE BACK-UP SOURCE (EM):
      3a/3EM – ROUTED THROUGH A U.L. LISTED TRANSFER RELAY (LC & D #GR-2001E/S) FOR SWITCHED CONTROLS OR A U.L. LISTED TRANSFER SWITCH (BODINE #GTD SERIES DEVICE) FOR DIMMING CONTROLS. CONNECTED TO A CONSTANT HOT EMERGENCY CIRCUIT "3". SEE DISTRIBUTED LIGHTING CONTROL SPECIFICATIONS FOR DEVICE REQUIREMENTS WHEN CONTROLLED BY OCCUPANCY SENSORS.
      3NL/3EM – FIXTURE CONNECTED TO A CONSTANT HOT EMERGENCY CIRCUIT "3".
   c. REMOTE BACK-UP SOURCE (EM) NOTES:
      – ALL REMOTE BACK UP SOURCE (EM) FIXTURES SHALL BE PROVIDED WITH AN IN LINE FUSE. PROVIDE ADDITIONAL LABELING TO INDICATE FIXTURE IS PROTECTED BY A FUSE.
2. EMERGENCY BATTERY PACK NOTES:
   a. PROVIDE INTEGRAL TEST SWITCH OPTION FOR ALL EMERGENCY BATTERY PACKS INSTALLED IN LIGHT FIXTURES.
   b. ALL RECESSED DOWNLIGHTS SUPPLIED WITH A BATTERY PACK SHALL BE PROVIDED WITH AN INTEGRAL COMBINATION TEST SWITCH / CHARGING INDICATOR LIGHT- MOUNTED INSIDE THE REFLECTOR. REMOTE TEST SWITCH / CHARGING LIGHTS ARE NOT ALLOWED. THE TEST SWITCH / CHARGING INDICATOR LIGHT SHALL BE SECURELY ATTACHED TO THE REFLECTOR WITH 18" OF SLACK LEADS, FOR EASY REMOVAL OF THE REFLECTOR ASSEMBLY.
   c. BATTERY PACKS ALL SHALL BE PROVIDED WITH A COMBINATION TEST SWITCH / CHARGE LIGHT.
   d. CONTRACTOR TO VERIFY WITH FIXTURE MANUFACTURER(S) PRIOR TO BID THAT EMERGENCY BATTERY PACKS ARE INTEGRAL TO FIXTURE HOUSINGS.
   e. SHOULD THE SPECIFIED LED EMERGENCY BATTERY PACK(S) NOT FIT WITHIN A GIVEN FIXTURE(S), CONTRACTOR SHALL INCLUDE ALL COSTS IN BASE BID TO LOCATE/CONNECT SELF-TESTING MINI INVERTER(S) (IOTA #ILS SERIES OF BODINE#ELI-S-[WATT?]) REMOTELY FROM THE FIXTURE(S) IN THE NEAREST ELECTRICAL ROOM OR TO LOCATE EMERGENCY BATTERY PACK(S) REMOTELY FROM THE FIXTURE ABOVE THE NEAREST ACCESSIBLE CEILING.
   f. EMERGENCY OPERATION OF LED FIXTURE FOR A MINIMUM OF 90 MINUTES, AND A MINIMUM OF 10 WATTS, OR AS SPECIFIED. ACCEPTABLE MANUFACTURES: BODINE OR IOTA.
   g. TO MAINTAIN UL LISTING OF LED FIXTURE, FIXTURE MANUFACTURER(S) SHALL INSTALL LED EMERGENCY BATTERY PACKS AT THE FACTORY AND OBTAIN A UL LISTING FOR THE FIXTURE WITH EMERGENCY BATTERY PACK. FIELD-INSTALLATION OF LED EMERGENCY BATTERY PACK9S) IS PROHIBITED.
   h. PROVIDE "DL" OPTION IN ALL DAMP LABEL INSTALLATIONS.

LIGHTING FIXTURE SCHEDULE

SYMBOL	TYPE	MANUFACTURER AND MODEL NUMBER	FIXTURE VA/ WATTS	LAMP/ LAMP OPTION	GENERAL DESCRIPTION
	A	– – – EQUAL BY: –	–/–	–/–	– – – – –
	B	– – – EQUAL BY: –	–/–	–/–	– – – – –
	C	– – – EQUAL BY: –	–/–	–/–	– – – – –
	S1	EATON: MCGRAW – EDISON GLEON-AF-02-LED-E1-T4W--[FINISH?]-600 MS-L20/SSS-5-A-20-S-[FINISH?]-A-1 EQUAL BY: APPROVED EQUAL	66/66	4000K/LED	SINGLE HEAD PARKING LOT POLE FOR USE WITH (1) 66W LED MODULE AT 4000K. 20'-0" POLE HEIGHT. FINISH TBD. ON/OFF MOTION SENSOR ON POLE. – – –
	S2	EATON: MCGRAW – EDISON (2)GLEON-AF-02-LED-E1-T4W-[FINISH?]-600 MS-L20/SSS-5-A-20-S-[FINISH?]-A-2 EQUAL BY: APPROVED EQUAL	132/132	4000K/LED	DOUBLE HEAD PARKING LOT POLE FOR USE WITH (2) 66W LED MODULE AT 4000K. 20'-0" POLE HEIGHT. FINISH TBD. ON/OFF MOTION SENSOR ON POLE. – – –
	S3	PEMCO BOCA2-FA-70W4K-U-5-BC1-PT-N-[FINISH?] POLE:4-10-RSS-S-D1-FBC-AB-[FINISH?] EQUAL BY: APPROVED EQUAL	70/70	4000K/LED	PEDESTRIAN POLE FOR USE WITH (1) 70W LED MODULE AT 4000K. 10-0" POLE HEIGHT. FINISH TBD. – – –
	S4	RAYON T630LED-30-UNI12-40-T4-[FINISH?] – EQUAL BY: APPROVED EQUAL	30/30	4000K/LED	EXTERIOR WALL PACK FOR USE WITH (1) 30W LED MODULE AT 4000K. FINISH TBD. – – – –

SEE GENERAL LIGHTING FIXTURE SCHEDULE NOTES FOR CRITICAL FIXTURE SPECIFICATION AND ORDERING INFORMATION.

Copyright © 2019
All ideas, designs, arrangements and plans indicated or represented by this drawing are owned by, and the property of, NICHOLS, MELBURG and ROSSETTO and were created, evolved and developed for use on, and in conjunction with, the specified project. None of such ideas, designs, arrangements or plans shall be used by, or disclosed to any person, firm or corporation for any purpose whatsoever without the written permission of NICHOLS, MELBURG and ROSSETTO.

NICHOLS MELBURG & ROSSETTO
ARCHITECTS + ENGINEERS
555 MAIN STREET, SUITE 300
CHICO, CA. 95928
(530) 891-1710 (530) 891-0138 FAX
http://www.nmrdesign.com

CONSULTANTS

tk1sc COLLABORATIVE
15231 Laguna Canyon Road, Suite 100
Irvine, California 92618
949.751.5800 www.tk1sc.com
Project Leader - Jerry Leonhardt
Electrical Lead - Jerry Leonhardt
tk1sc Job #: 2019-0401

LICENSE STAMPS

PROJECT NAME

BITTERWATER/ CHESTNUT WORKFORCE HOUSING

LYONS ST. & CHESTNUT AVE.
KING CITY, CA 93930

SHEET TITLE

FIXTURE SCHEDULE AND NOTES

DRAWING STATUS

CONDITIONAL USE PERMIT

REVISIONS

Sym.	Description	Date

Drawn By	
Date Issued	2019-11-06
Scale	_
Project No.	2019-0401

SHEET No.

E003

Login Name: Leonhardt
Plot Date: November 07, 2019 - 8:11 am
File Name: P:\2019\2019-0401 Rava Ranch Workforce Housing\Drawings and Models\CAD\Electrical\E003.dwg
XREFS: NMR titleblock sht

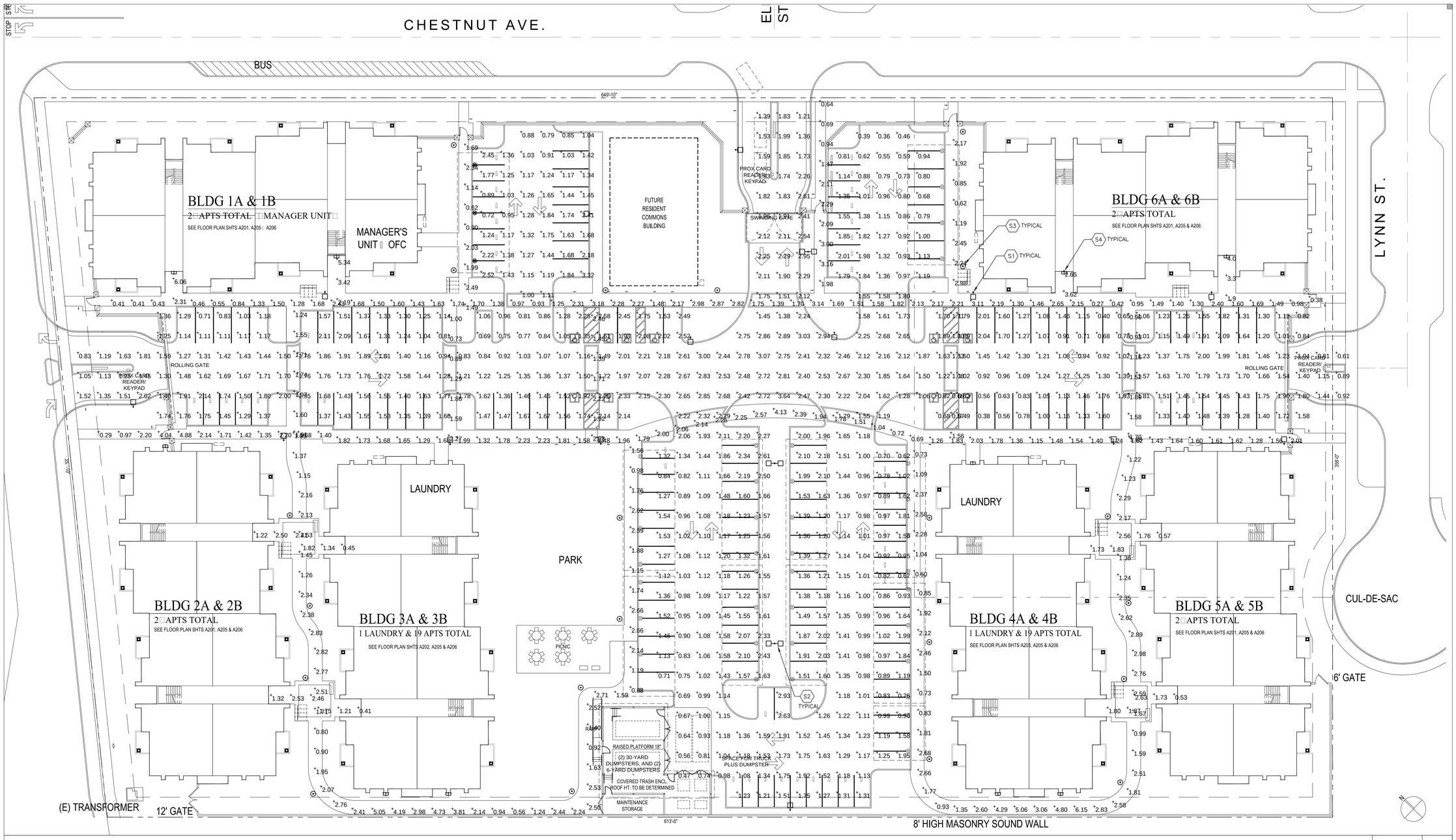

SITE PHOTOMETRIC PLAN | 1" = 20'-0" | 1

NOTE:

THIS LIGHTING CALCULATION REPRESENTS ILLUMINATION LEVELS CALCULATED FROM LABORATORY DATA TAKEN UNDER CONTROLLED CONDITIONS IN ACCORDANCE WITH ILLUMINATING ENGINEERING SOCIETY (IES) APPROVED METHODS.

Copyright © 2019

All ideas, designs, arrangements and plans indicated or represented by this drawing are owned by, and the property of, NICHOLS, MELBURG and ROSSETTO and were created, evolved and developed for use on, and in conjunction with, the specified project. None of such ideas, designs, arrangements or plans shall be used by, or disclosed to any person, firm or corporation for any purpose whatsoever without the written permission of NICHOLS, MELBURG and ROSSETTO.

NICHOLS MELBURG & ROSSETTO
ARCHITECTS + ENGINEERS
555 MAIN STREET, SUITE 300
CHICO, CA 95928
(530) 891-1710 (530) 891-0138 FAX
http://www.nmrdesign.com

CONSULTANTS

tk1sc COLLABORATIVE
15231 Laguna Canyon Road, Suite 100
Irvine, California 92618
949.751.5800 www.tk1sc.com
Project Leader - Jerry Leonhardt
Electrical Lead - Jerry Leonhardt
tk1sc Job #: 2019-0401

LICENSE STAMPS

PROJECT NAME

BITTERWATER/ CHESTNUT WORKFORCE HOUSING

LYONS ST. & CHESTNUT AVE.
KING CITY, CA 93930

SHEET TITLE

SITE PHOTOMETRIC PLAN

DRAWING STATUS

CONDITIONAL USE PERMIT

REVISIONS

Sym.	Description	Date

Drawn By	
Date Issued	2019-11-06
Scale	_
Project No.	2019-0401

SHEET No.

E103

Login Name: Leonhardt
Plot Date: November 07, 2019 - 8:11 am
File Name: P:\2019\2019-0401 Bitterwater Workforce Housing\Drawings and Models\CAD\Electrical\E103.dwg
Plot Scale: 1:1 Plot Device: DWG To PDF.pc3 Paper Size: ARCH E1 (36.00 x 48.00 Inches)
XREFS: XUR; XBIND: E1; XHIDE; E1_Lutte photometric; E1_Lutte photometric_data

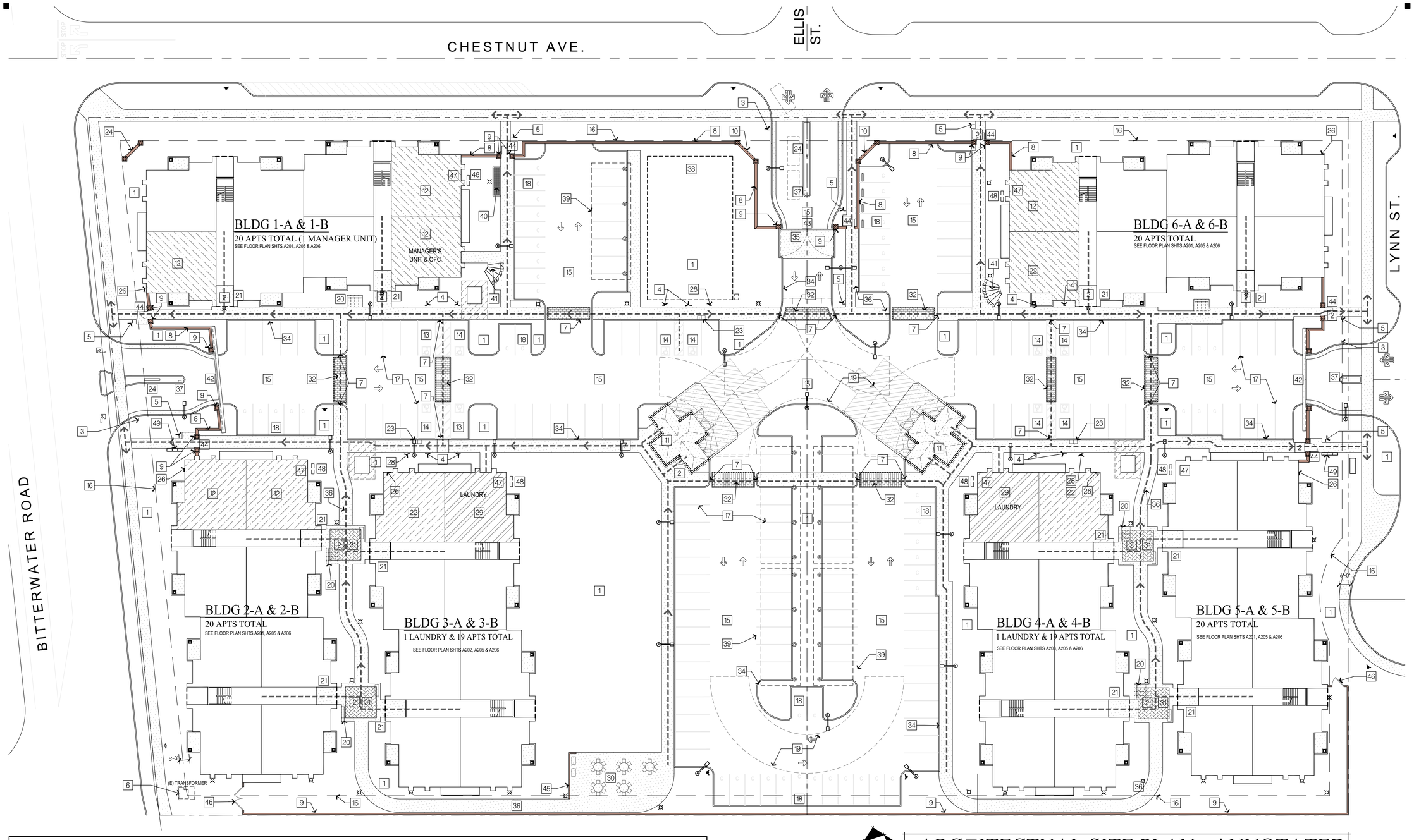

ARC□ITECTUAL SITE PLAN - ANNOTATED

SCALE: 1" = 20'-0"

KEYED NOTES

1. IRRIGATED LANDSCAPED AREA - SEE L.S. DWGS.
2. CONCRETE SLAB AT ENTRANCE OR WALKWAY INTERSECTION - SEE 13/A105. SLOPE @ MAX. 1.9%, SLOPE AWAY FROM BLDG., SEE CIVIL DWGS.
3. TOW-AWAY WARNING SIGN 'A' PER 11B-502.8 SEE 5/A022
4. ACCESSIBLE PARKING SIGN 'B', SEE 4/A022
5. "ACCESSIBLE PATH OF TRAVEL" SIGN 'E', SEE 6/A022
6. (E) TRANSFORMER TO BE DEMO'D - SEE ELEC'L DWGS.
7. CURB RAMP PER 11B-406.2, MAX. SLOPE IN DIRECTION OF TRAVEL, 1:12
8. DECORATIVE SITE WALL 'A' - SEE 20/A105.
9. DECORATIVE PILASTER WITH LIGHT FIXTURE - SEE 16/A105.
10. DECORATIVE SITE WALL 'B' - SEE 18/A105.
11. TRASH/RECYCLING ENCLOSURE - SEE 1/A103.
12. RESIDENTIAL UNIT WITH MOBILITY FEATURES PER 11B-233.3.1.1, 6 TOTAL.
13. VAN ACCESSIBLE PARKING - SEE 18/A022
14. ACCESSIBLE PARKING - SEE 18/A022
15. ASPHALT PAVING - SEE CIVIL DWGS. FOR PAVING SECTION.
16. BUILDING SETBACK FROM PROPERTY LINE
17. 4" WIDE SPACE STRIPING, TYP.
18. COMPACT PARKING SPACE, 8'-0" x 16'-0"
19. FIRE APPARATUS TURNING RADII
20. BICYCLE RACK - SEE 1/A105.
21. INSTALL SIGN 'G' PER 6/A022, COMPLYING WITH BRAILLE REQUIREMENTS OF 11B-703 STATING "NO SMOKING WITHIN 25 FEET OF BUILDING ENTRIES, OUTDOOR AIR INTAKES AND OPERABLE WINDOWS"
22. RESIDENTIAL UNIT WITH COMMUNICATIONS FEATURES PER 11B-809.5, 3 TOTAL.
23. (2) FUTURE ELECTRIC VEHICLE CHARGING STATIONS, SEE ELEC'L DWGS.
24. PROPOSED MONUMENT SIGN LOCATION, UNDER SEPARATE PERMIT, SEE 16 AND 18/A105.
25. 2'-0" VEHICLE OVERHANG BEYOND CURB.
26. 8 INCH HIGH, ALPHA-NUMERIC REFLECTORIZED BLDG ADDRESS IN 1 INCH STROKE MOUNTED AT 18'-0" ABV. 1ST FLOOR.
27. FIRE DEPT. CONNECTION TO SPRINKLER SYSTEM.
28. SIGNAGE INDICATING "DESIGNATED PARKING SPACE FOR LOW-EMITTING, FUEL-EFFICIENT OR CARPOOL/VANPOOL VEHICLE"
29. LAUNDRY - SEE A222
30. RESIDENT BBQ AREA, CONCRETE SLAB SLOPE TO DRAIN, FURNITURE BY OWNER.
31. STAMPED & COLORED CONCRETE DETAIL INFILL.
32. STAMPED & COLORED ASPHALT AT PEDESTRIAN CROSSING.
33. REMOVABLE STEEL BOLLARD PER UTILITY CO. STANDARD; AMT. AND LOCATION AS REQ'D.
34. 6" WIDE x 6" HIGH CONCRETE CURB, SEE 11/A105 AND CIVIL DWGS.
35. CONCRETE PAVING.
36. CONCRETE WALKWAY, MAX. SLOPE 5% IN DIRECTION OF TRAVEL
37. RFID CARD READER / KEYPAD FOR ELECTRIC VEHICULAR GATE.
38. LOCATION OF FUTURE RESIDENT COMMONS BUILDING.
39. SOLAR SHADE STRUCTURE OVER PARKING (BY OTHERS)
40. BOOT WASH GRATED VAULT, SEE 17/A105.
41. BIKE LOCKER: RELIANCE FOUNDRY R-6285 OR EQUAL. EXPANSION BOLT TO CONCRETE SLAB AT 3 POINTS WITH 3/8" BOLTS, 3" MIN.
42. 6 FT HIGH, 25 FT WIDE STEEL ROLLING BI-PART GATE WITH DECORATIVE PICKETS, RFID/KEYPAD ENTRY, FREE EXIT.
43. 6 FT HIGH, 27 FT WIDE STEEL SWINGING BI-PART GATE WITH DECORATIVE PICKETS, RFID/KEYPAD ENTRY, FREE EXIT.
44. 6 FT HIGH, 4 FT WIDE STEEL SWINGING PEDESTRIAN GATE WITH DECOR PICKETS, RFID/KEYPAD ENTRY, PANIC HARDWARE EXIT.
45. 4 FT HIGH, SPLIT FACE, COLORED CMU WALL WITH 2" PRECAST CONCRETE COPING, SEE 3/A106.
46. LANDSCAPING EQUIPMENT & MAINTENANCE ACCESS GATE - SIM TO 5/A105.
47. WINDOW ADJACENT GAS METER TO BE TYPE 'A1' FIXED.
48. GAS METER, SEE MECH'L SITE PLAN
49. THREE PEDESTAL-MOUNTED MAILBOXES, SEE SPEC.

LEGEND

- CONCRETE
- CONCRETE - COLORED
- ASPHALT
- ASPHALT - COLOR 1
- ASPHALT - COLOR 2
- ACCESSIBLE AND/OR DWELLING UNIT WITH COMMUNICATION FEATURES, REFER TO KEYED NOTES
- LAUNDRY ROOM
- SINGLE OR DOUBLE-HEADED PARKING LOT LIGHT FIXTURES, SEE 2/A105 FOR FOUNDATION
- PEDESTRIAN POLE-MOUNTED LIGHT FIXTURE
- ACCESSIBLE PARKING SPACE
- FIRE HYDRANT

GENERAL NOTES

1. SEE CIVIL DRAWINGS FOR GRADES AND UTILITIES.
2. SEE LANDSCAPE DRAWINGS FOR LANDSCAPING AND IRRIGATION.
3. SEE CODE ANALYSIS SHEET A011 FOR ACCESSIBLE AND SENSORY UNIT AMOUNT CALCULATIONS.

PATH OF TRAVEL

1. PATH OF TRAVEL (P.O.T.) AS INDICATED IS A BARRIER FREE ACCESS ROUTE WITHOUT ANY ABRUPT VERTICAL CHANGES EXCEEDING ¼" BEVELED AT 1:2 MAXIMUM SLOPE, EXCEPT THAT LEVEL CHANGES DO NOT EXCEED ¼" VERTICAL AND IS AT LEAST 48" WIDE. SURFACE IS SLIP RESISTANT, STABLE, FIRM, AND SMOOTH. CROSS-SLOPE DOES NOT EXCEED 2% AND SLOPE IN THE DIRECTION OF TRAVEL IS LESS THAN 5% UNLESS OTHERWISE INDICATED. P.O.T. SHALL MAINTAIN FREE OF OVERHANING OBSTRUCTIONS TO 80" MINIMUM (ADA 307.4) AND PROTRUDING OBJECTS GREATER THAN 4" PROJECTION FROM WALL AND ABOVE 27" AND LESS THAN 80" (ADA 307.2). PATH OF TRAVEL COMPLIES WITH ADA CHAPTER 4 "ACCESSIBLE ROUTES".
2. GRATING WITHIN THE P.O.T. SHALL HAVE OPENINGS NOT TO EXCEED 1/2" IN THE DIRECTION OF TRAVEL OR EACH WAY IN PLAZAS

PARKING REQMNTS.

PARKING SPACES REQ'D:
118 UNITS x 1.5 SPACES PER UNIT = 177 SPACES

ACCESSIBLE PARKING SPACES REQ'D:
177 SPACES x 5% FOR UNASSIGNED = 8.85 OR 9 SPACES
1 PER EVERY 8, OR 2 SPACES MUST BE VAN-ACCESSIBLE

TYPE OF PARKING SPACES PROVIDED:	AMT:
FULL SIZE:	116 (71% INCL. ACCESSIBLE)
COMPACT:	51 (29%)
ACCESSIBLE:	10 (2 VAN ACCESSIBLE)
TOTAL PARKING ON SITE:	177

FUTURE EV PARKING SPACES REQ'D:
177 SPACES x 3% = 5.31 OR 6 SPACES
6 SPACES PROVIDED, SEE NOTE 23

SITE STATISTICS

UNIT OR FACILITY TYPE:	AREA EA:	AMT:	TOTALS:
TWO-BEDROOM APT UNITS:	1196 SF	117	139,932 SF
MANAGER'S OFC & APT UNIT:	1196 SF	1	1196 SF
LAUNDRY FACILITIES:	1196 SF	2	2392 SF
TOTAL ENCLOSED SF:			143,520 SF

TOTAL PARCEL AREA:	227,580 SF
BUILDING FOOTPRINTS:	67,350 SF
HARDSCAPE (SIDEWALKS):	22,489 SF
PAVING:	63,384 SF
TOTAL COVERAGE	153,223 SF (67%)
OPEN SPACE	74,357 SF (33%)

Copyright © 2020
All ideas, designs, arrangements and plans indicated or represented by this drawing are owned by, and the property of, NICHOLS, MELBURG and ROSSETTO and were created, evolved and developed for use on, and in conjunction with, the specified project. None of such ideas, designs, arrangements and plans shall be used by or disclosed to any person, firm or corporation for any purpose whatsoever without the written permission of NICHOLS, MELBURG and ROSSETTO.

NICHOLS MELBURG & ROSSETTO
ARCHITECTS + ENGINEERS
555 MAIN STREET, SUITE 300
CHICO, CA. 95928
(530) 891-1710 (530) 891-0138 FAX
http://www.nmrdesign.com

CONSULTANTS

LICENSE STAMPS

LICENSED ARCHITECT
DAVID A. ROSSETTO
No. C26604
REN. 9-30-21
STATE OF CALIFORNIA

PROJECT NAME

Rava RANCHES INC.

BITTERWATER/ CHESTNUT WORKFORCE HOUSING

LYONS ST. & CHESTNUT AVE.
KING CITY, CA 93930

SHEET TITLE

ARC□ITECTURAL SITE PLAN □ ANNOTATED

DRAWING STATUS

CONSTRUCTION DOCUMENTS

BUILDING DEPT REVIEW

REVISIONS

Sym.	Description	Date

Drawn By	KAJ
Date Issued	2019-12-20
Scale	1" = 20'-0"
Project No.	18-1765

SHEET No.

A10□

Login Name: Kurt
Plot Date: January 08, 2020 - 11:14 am
File Name: S:\Work\18-1765 Rava Ranches Workforce Housing\2-0 Drawings & Models\0-01 CAD Files\18-1765_A102_SITEPLN.dwg
PAPER: 24X36 1 = 20'-0"

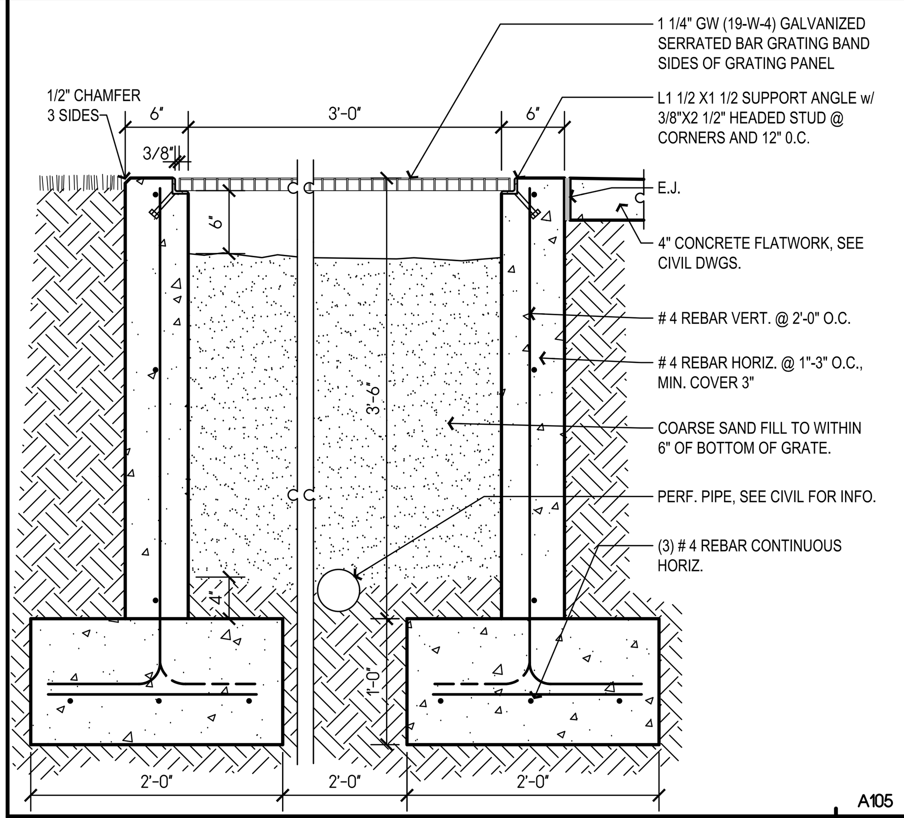

BOOT WASH VAULT

SCALE: 1"-0" (17)

FLOOR OR GROUND SURFACES

11B-403.5 ACCESSIBLE ROUTE SLOPES
RUNNING SLOPE OF WALKING SURFACES SHALL NOT BE STEEPER THAN 1:20 (5%). THE CROSS SLOPE SHALL NOT BE STEEPER THAN 1:48 (2.08% SLOPE).

11B-302.3 OPENINGS
SHALL NOT ALLOW PASSAGE OF A SPHERE MORE THAN ½ INCH DIA. EXCEPT AS ALLOWED IN 407.4.3, 409.4.3, 410.4, 810.5.3 AND 810.10. ELONGATED OPENINGS ARE TO BE PERPENDICULAR TO THE DOMINANT DIRECTION OF TRAVEL.

11B-405 RAMPS
RUNNING SLOPE OF RAMPS SHALL NOT BE STEEPER THAN 1:12 WITH A CROSS SLOPE NOT STEEPER THAN 1:48.

11B-303 CHANGES IN LEVEL
CHANGES IN LEVEL UP TO 1/4" (6.4MM) MAY BE VERTICAL AND WITHOUT EDGE TREATMENT. CHANGES IN LEVEL BETWEEN 1/4" (6.4MM) AND 1/2" (12.7MM) SHALL BE BEVELED WITH A SLOPE NO GREATER THAN ONE UNIT VERTICAL IN 2 UNITS HORIZONTAL (50% SLOPE). CHANGES IN LEVEL GREATER THAN 1/2" (12.7MM) SHALL BE ACCOMPLISHED BY MEANS OF CURD RAMP, RAMP, ELEVATOR OR PLATFORM LIFT THAT COMPLIES WITH THIS CODE.

11B-403.7 CONTINUOUS GRADIENT
ALL WALKS WITH CONTINUOUS GRADIENTS SHALL HAVE LEVEL RESTING AREAS AT LEAST 5 FEET (1524 MM) IN LENGTH AT INTERVALS OF 400 FEET (121,920MM) MAXIMUM.

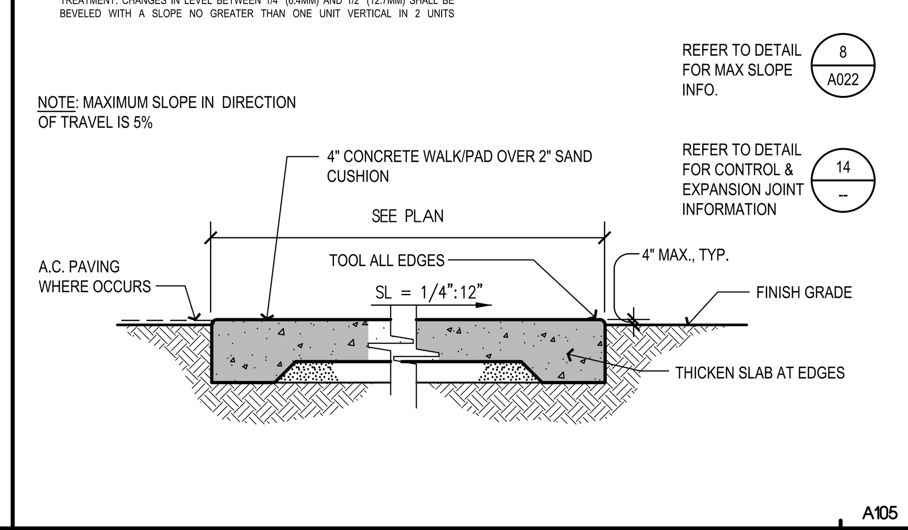

CONCRETE WALKWAY DESIGN

SCALE: 1/2" = 1'-0" (13)

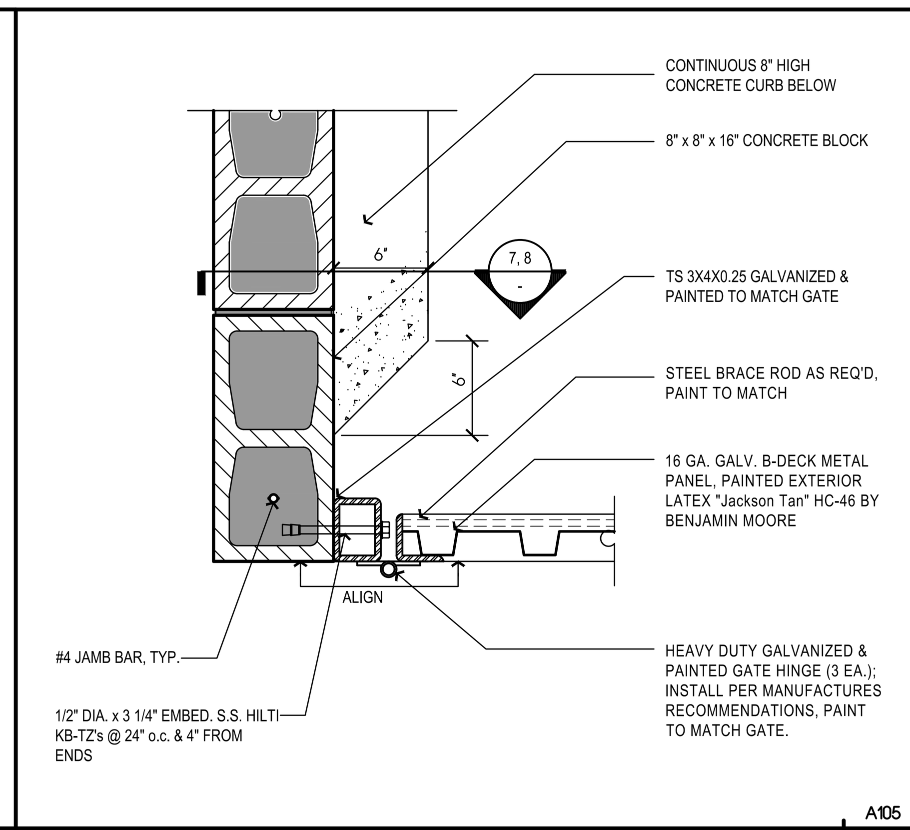

TRASH ENCLOSURE GATE HINGE

SCALE: 1 1/2"=1'-0" (9)

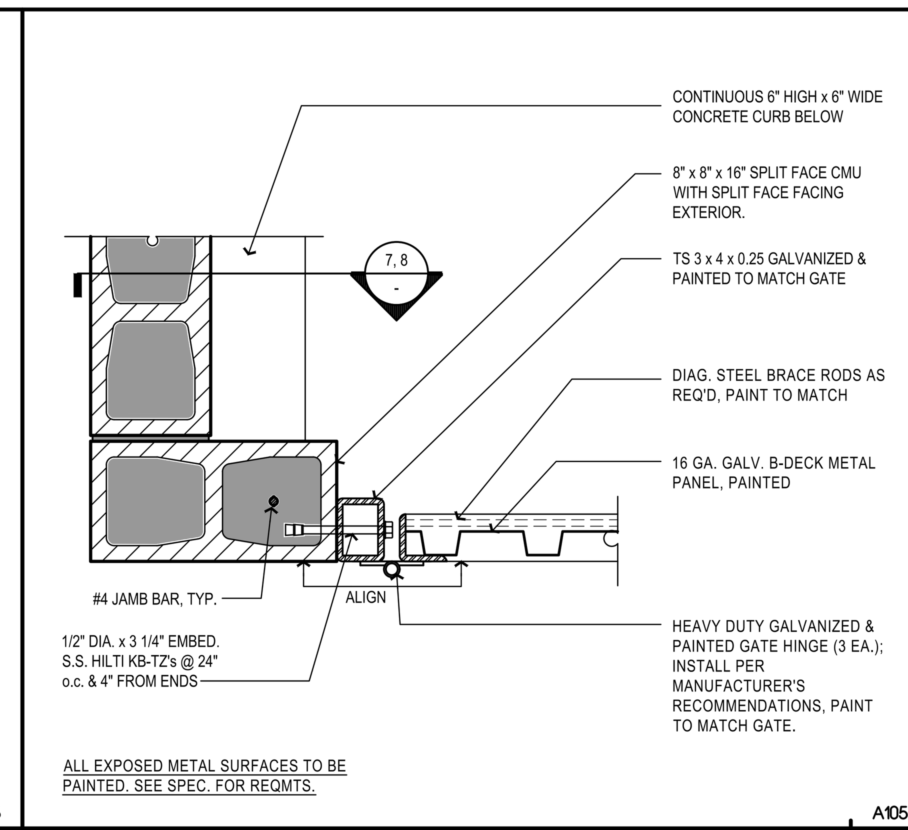

TRASH ENCLOSURE GATE HINGE

SCALE: 1 1/2"=1'-0" (5)

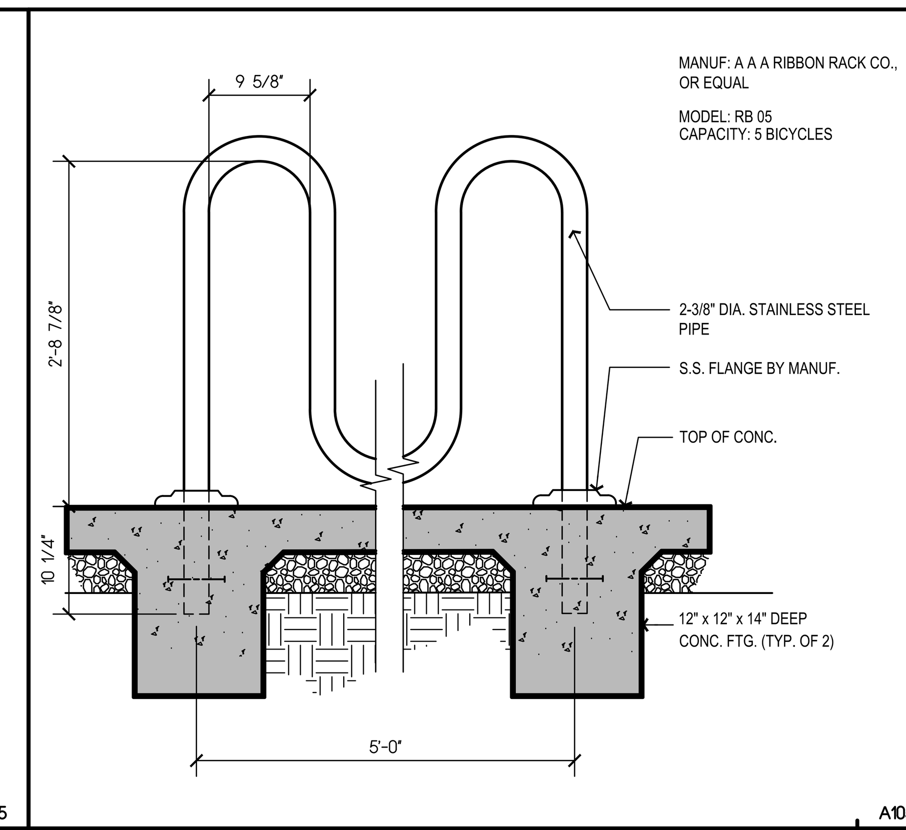

BIKE RACK

SCALE: 1"=1'-0" (1)

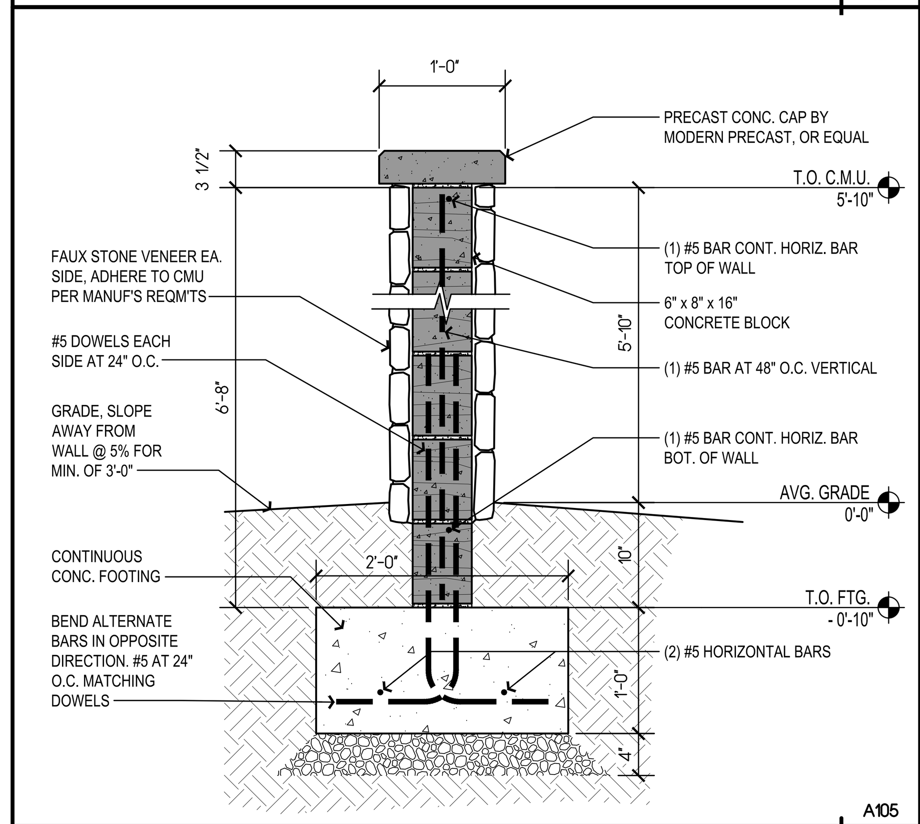

DECORATIVE SITE WALL 'B'

SCALE: 1" = 1'-0" (18)

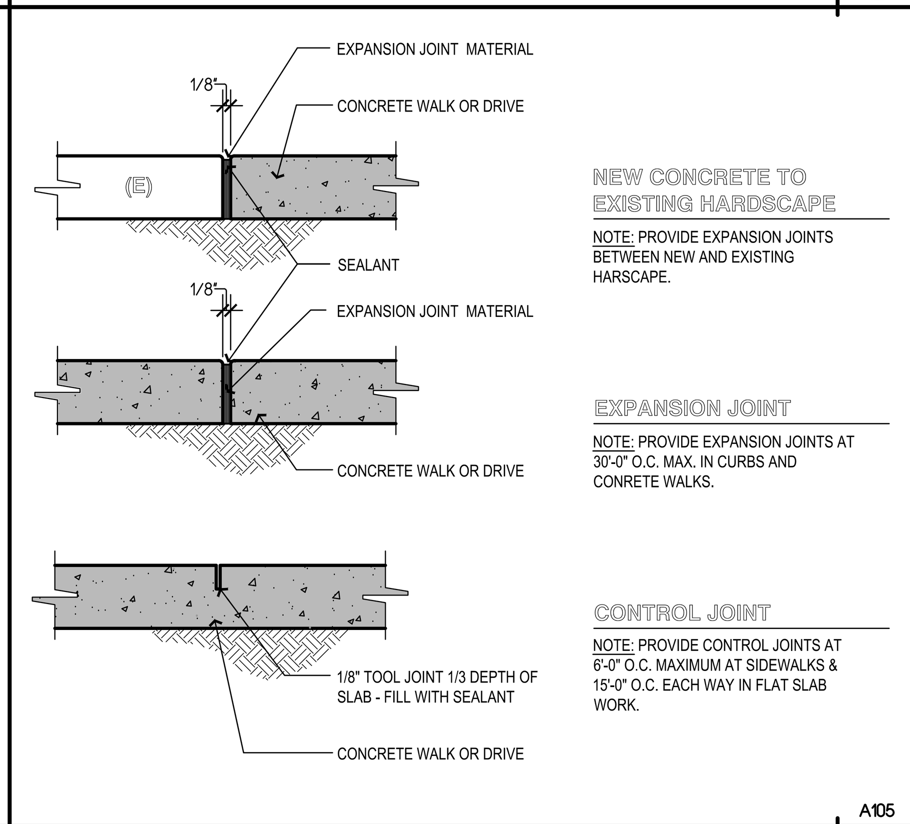

TYPICAL CONCRETE EXPANSION / CONTROL JOINT

SCALE: 1 1/2"=1'-0" (14)

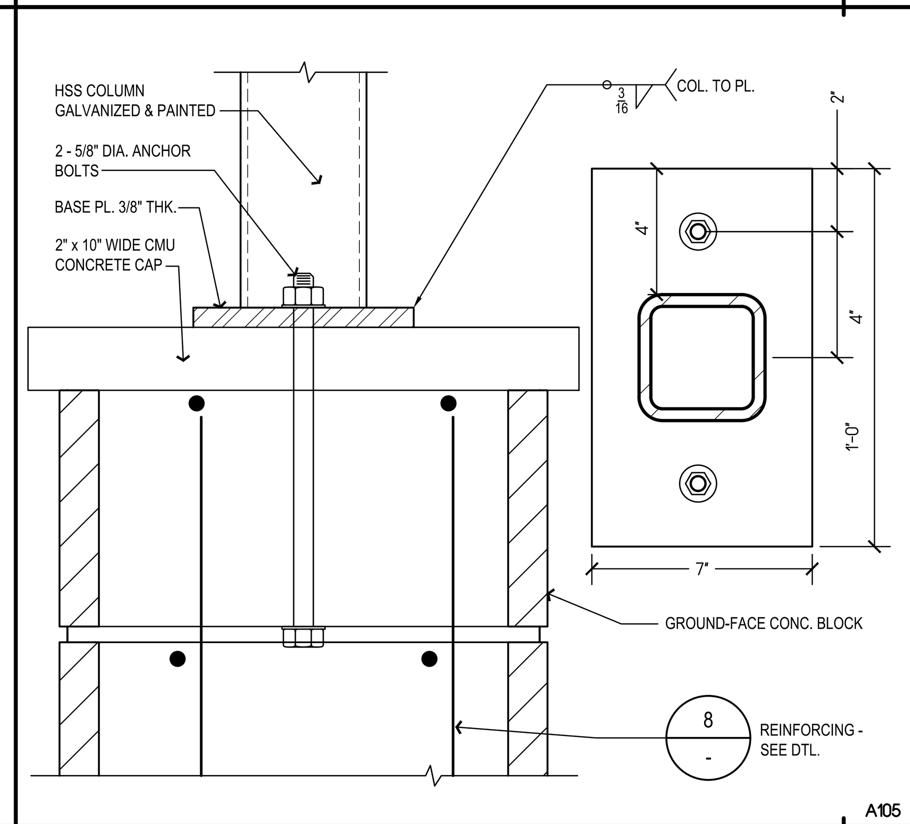

TRASH ENCLOSURE GATE - ROOF SUPPORT POST CONDITION 3

SCALE: 3"=1'-0" (10)

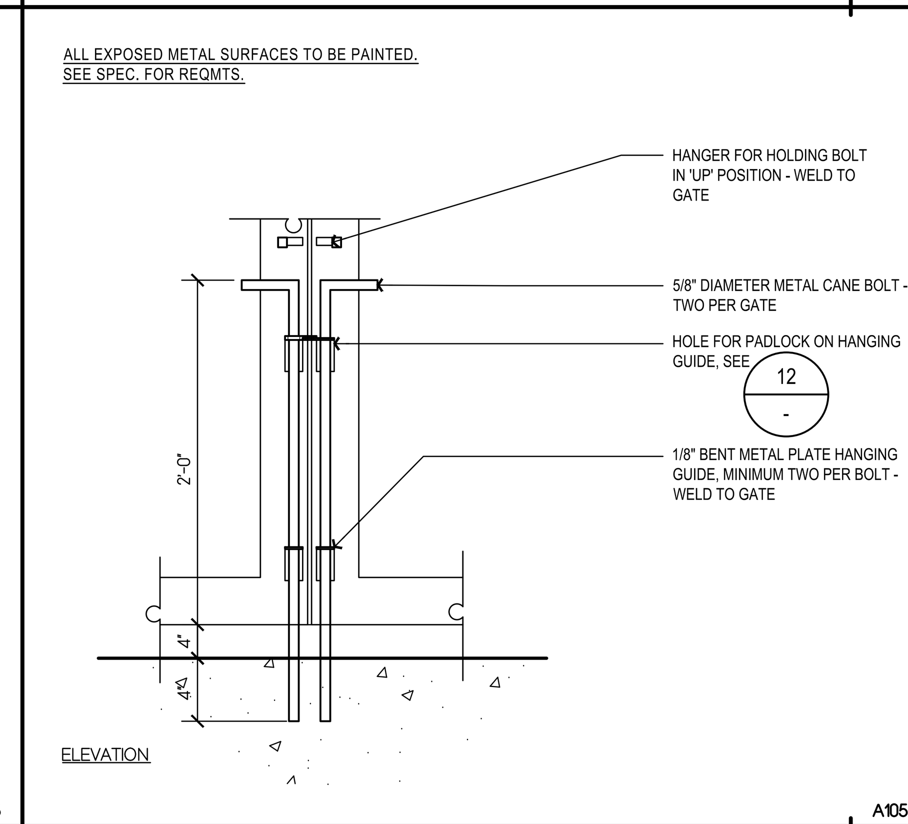

TRASH ENCLOSURE GATE - CANE BOLT

SCALE: 1 1/2"=1'-0" (6)

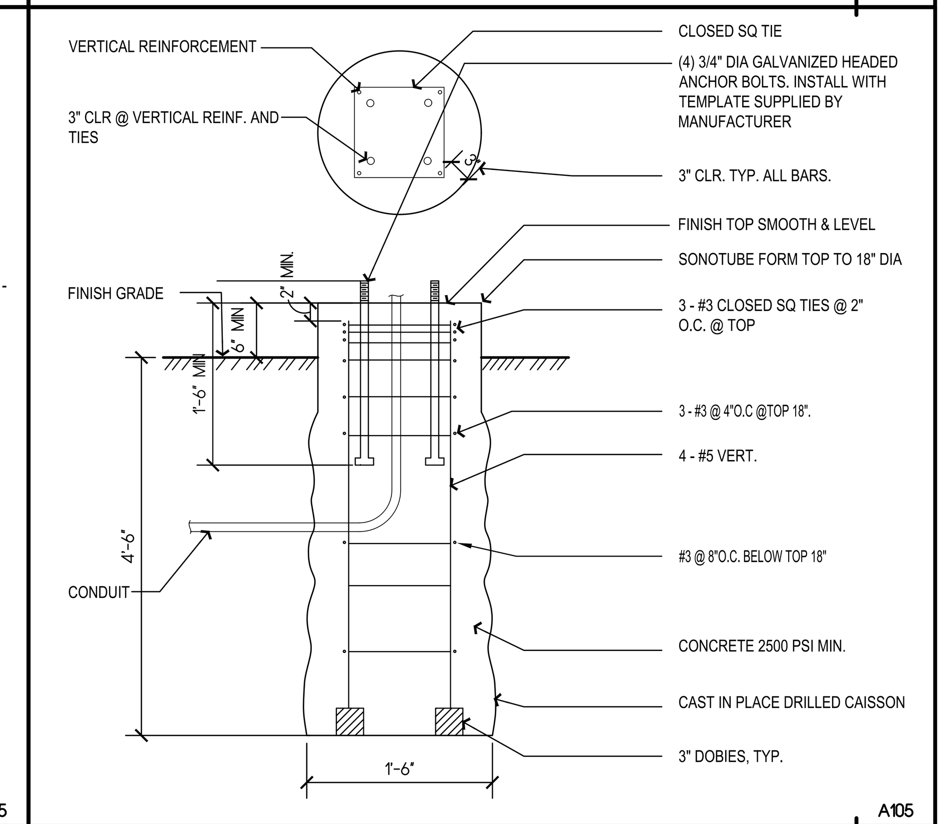

LIGHT POLE FOUNDATION

SCALE: 1"=1'-0" (2)

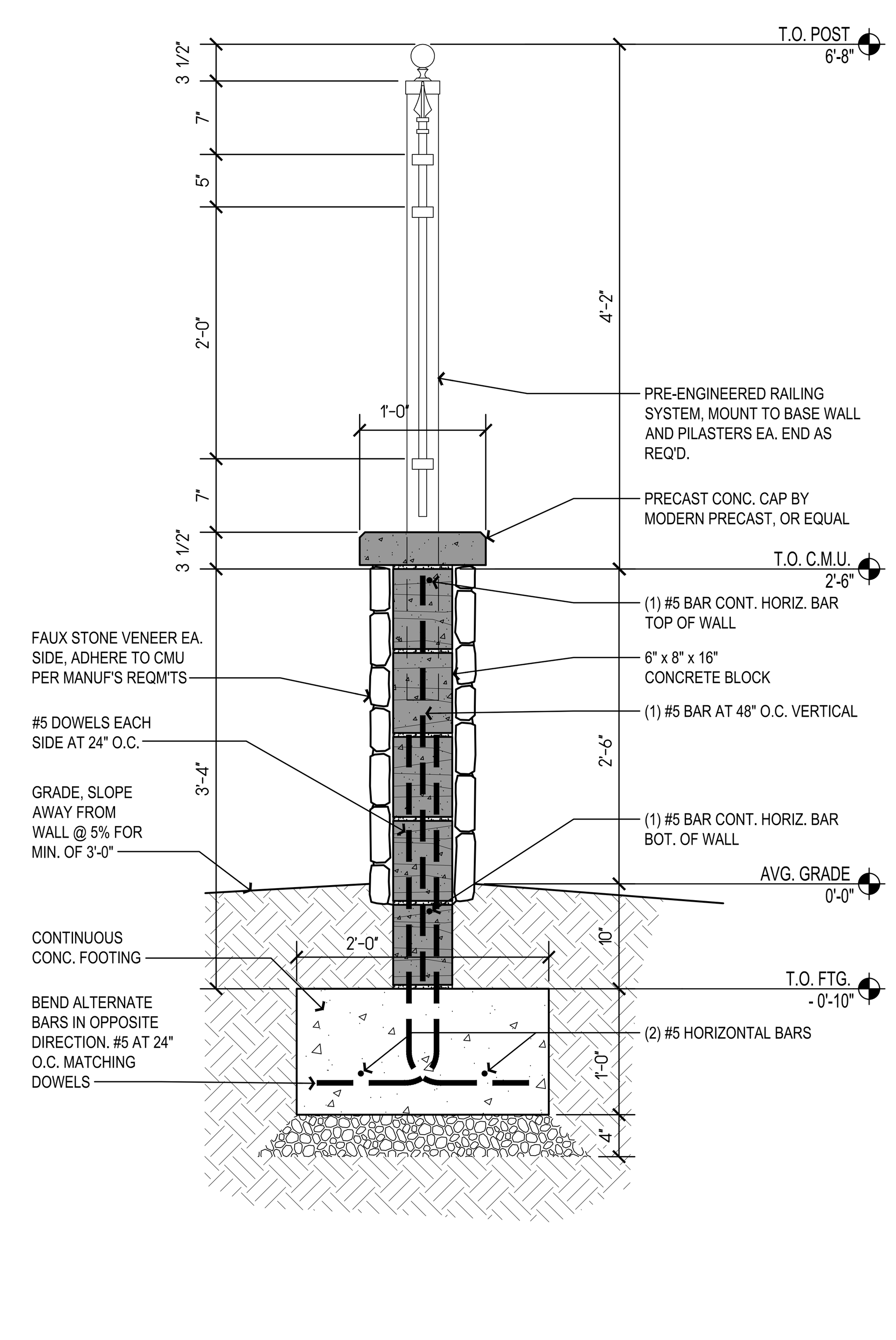

DECORATIVE SITE WALL 'A' WITH WROUGHT IRON FENCING

SCALE: 1" = 1'-0" (20)

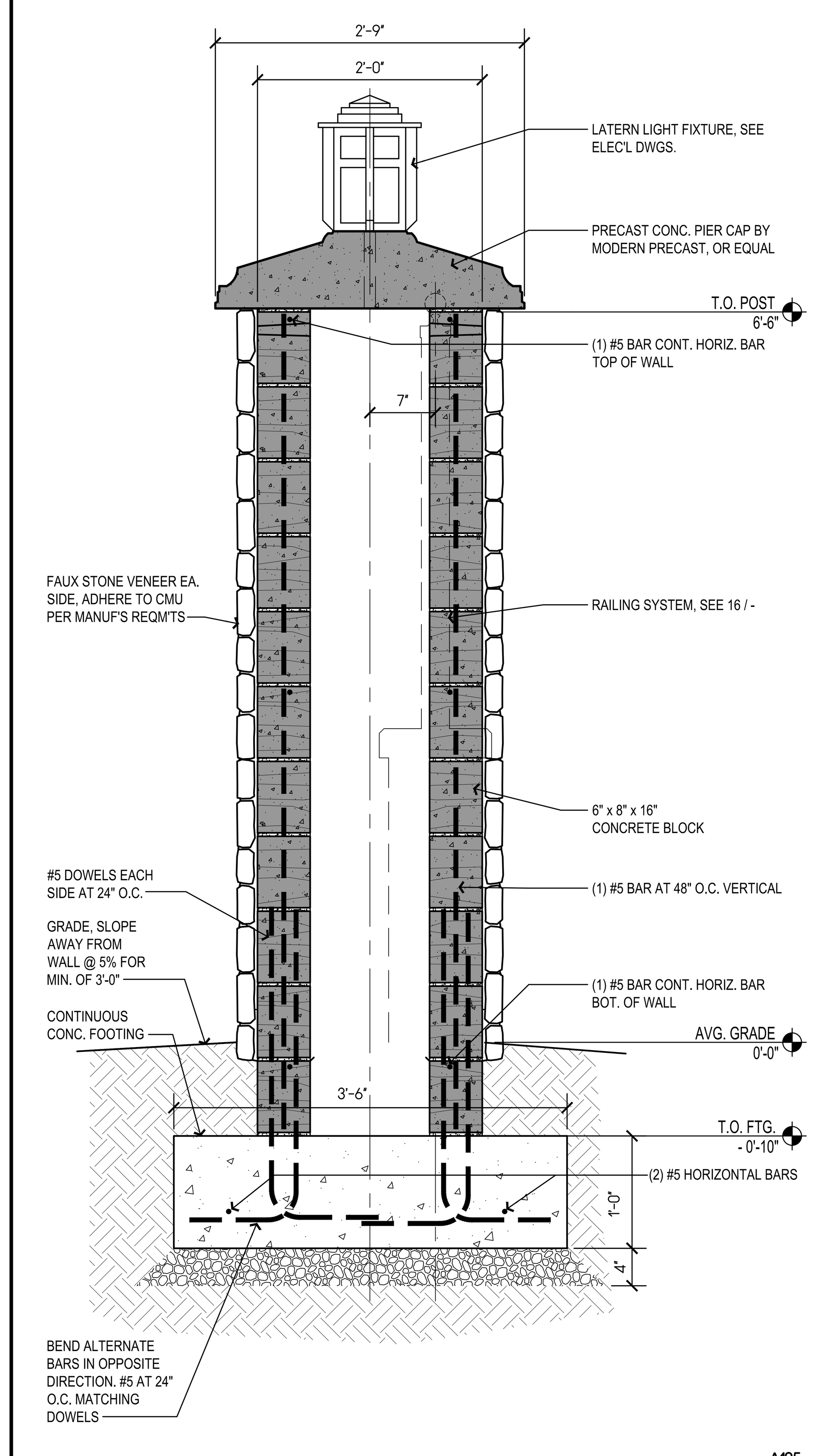

DECORATIVE SITE PIER WITH LATERN

SCALE: 1" = 1'-0" (16)

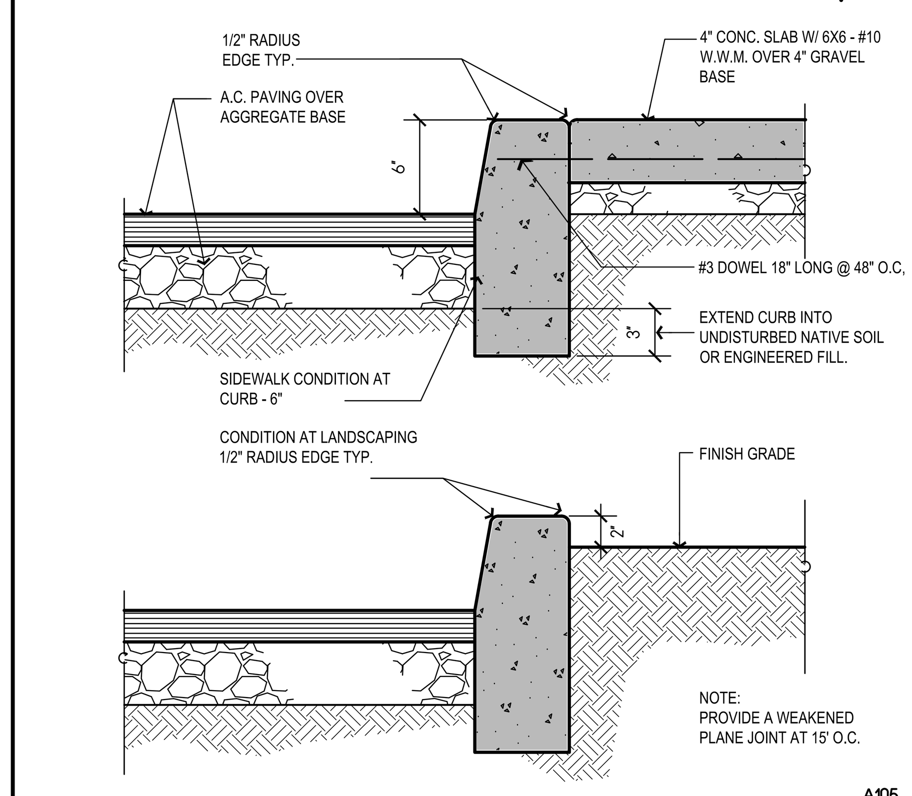

CONCRETE CURB

SCALE: 1/2" = 1'-0" (11)

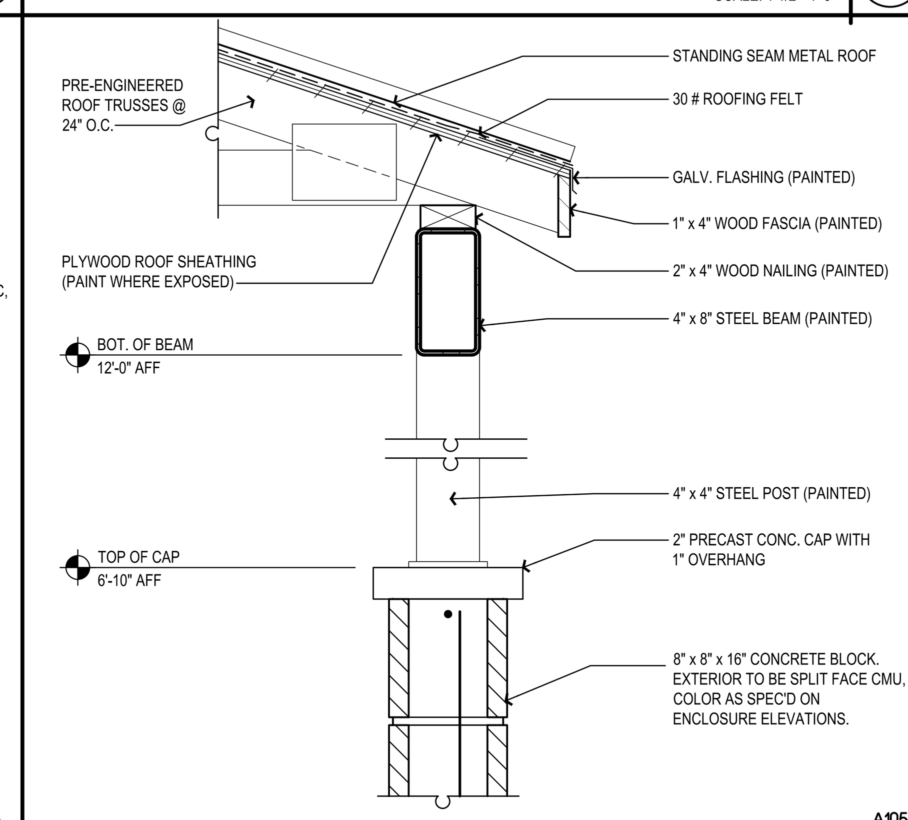

TRASH ENCLOSURE WALL SECTION AT TOP OF WALL & ROOF

SCALE: 1 1/2"=1'-0" (7)

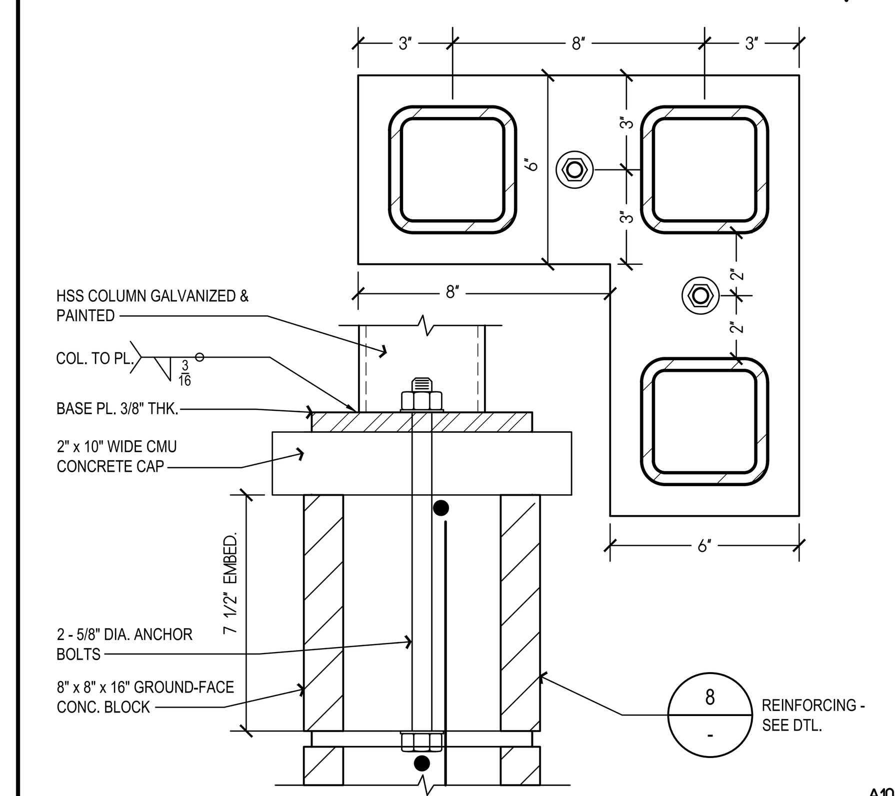

TRASH ENCLOSURE GATE - ROOF SUPPORT POST CONDITION 1

SCALE: 3"=1'-0" (3)

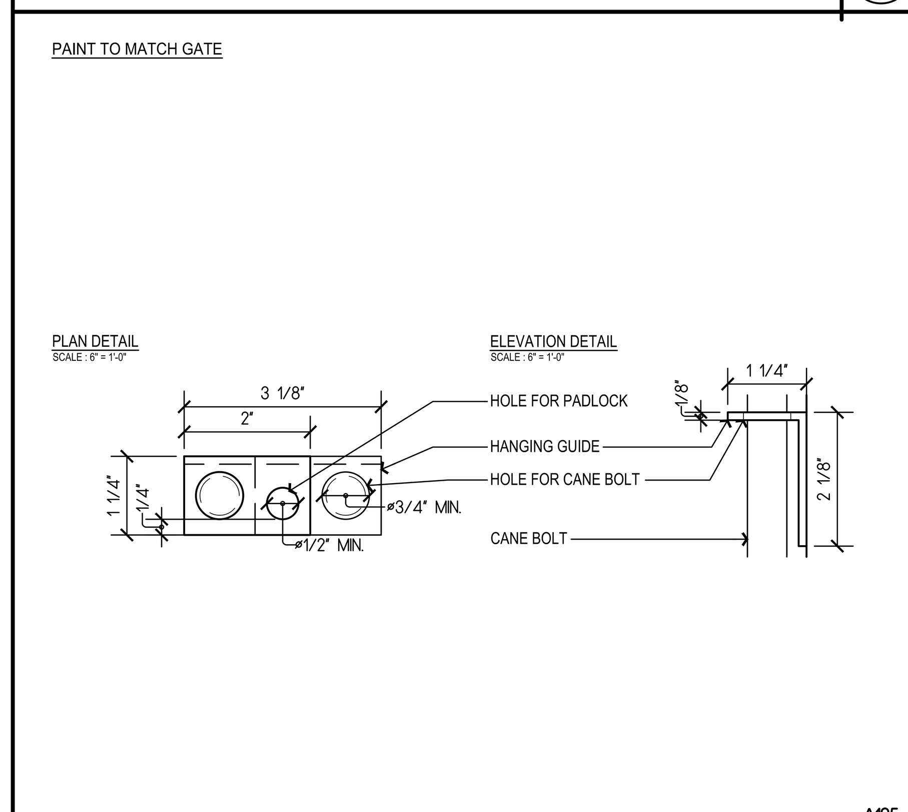

CANE BOLT GUIDE / PADLOCK CLASP

SCALE: 6"=1'-0" (12)

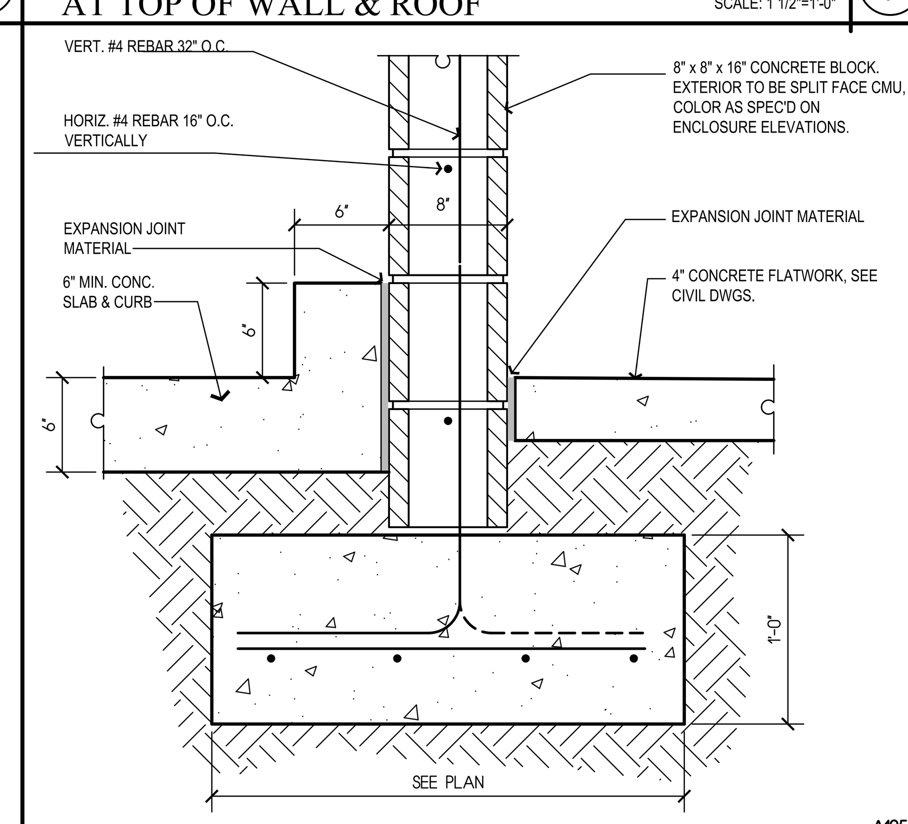

TRASH ENCLOSURE WALL SECTION AT FOUNDATION

SCALE: 1 1/2"=1'-0" (8)

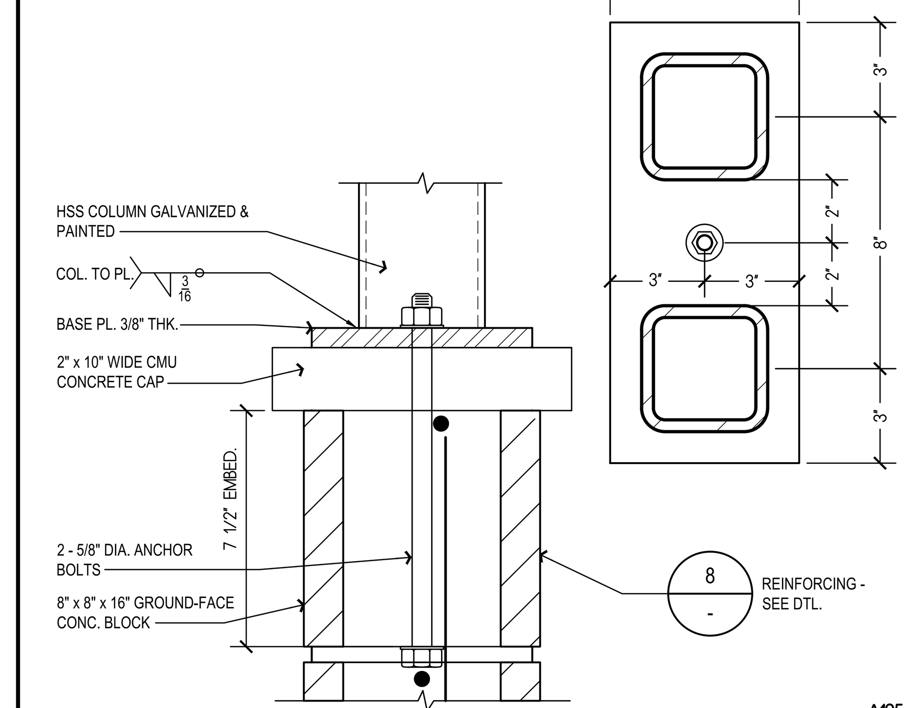

TRASH ENCLOSURE GATE - ROOF SUPPORT POST CONDITION 2

SCALE: 3"=1'-0" (4)

Copyright © 2020
All ideas, designs, arrangements and plans indicated or represented by this drawing are owned by, and the property of, NICHOLS, MELBURG and ROSSETTO and were created, evolved and developed for use on, and in conjunction with, the specified project. None of such ideas, designs, arrangements or plans shall be used by, or disclosed to any person, firm or corporation for any purpose whatsoever without the written permission of NICHOLS, MELBURG and ROSSETTO.

NICHOLS MELBURG ROSSETTO
ARCHITECTS + ENGINEERS
555 MAIN STREET, SUITE 300
CHICO, CA. 95928
(530) 891-1710 (530) 891-0138 FAX
http://www.nmrdesign.com

CONSULTANTS

LICENSE STAMPS

LICENSED ARCHITECT DAVID A. ROGERS No. C26604 REN. 9-30-21 STATE OF CALIFORNIA

PROJECT NAME

Rava RANCHES INC.

BITTERWATER/ CHESTNUT WORKFORCE HOUSING

LYONS ST. & CHESTNUT AVE.
KING CITY, CA 93930

SHEET TITLE

SITE DETAILS

DRAWING STATUS

CONSTRUCTION DOCUMENTS

BUILDING DEPT REVIEW

REVISIONS

Sym.	Description	Date

Drawn By	KAJ
Date Issued	2019-12-20
Scale	AS NOTED
Project No.	18-1765

SHEET No.

A10

Login Name: Kurt
Plot Date: January 08, 2020 - 4:51 pm
File Name: S:\Awork\18-1765 Rava Ranches Workforce Housing\0-0 Drawings & Models\0-01 CAD Files\18-1765_A105_SITEDETS.dwg
XREFS: X-TIT

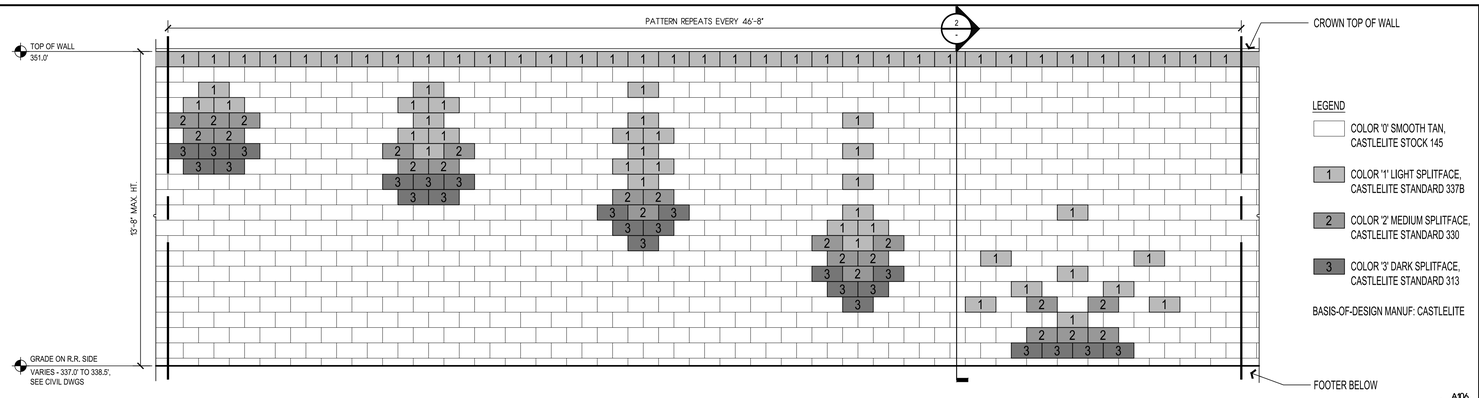

A106

SOUND WALL AT RAILROAD FACING TRACKS - RAIN DROP PATTERN

SCALE: 3/8"=1'-0"

5

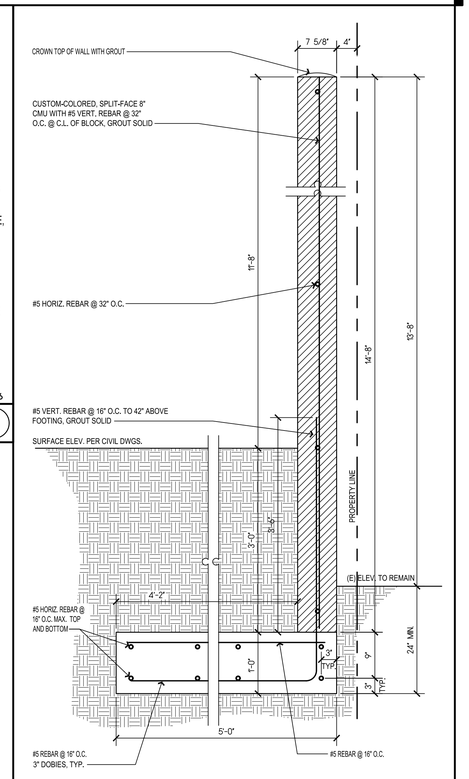

A106

SOUND WALL AT R.R. TRACKS

SCALE: 1"=1'-0"

2

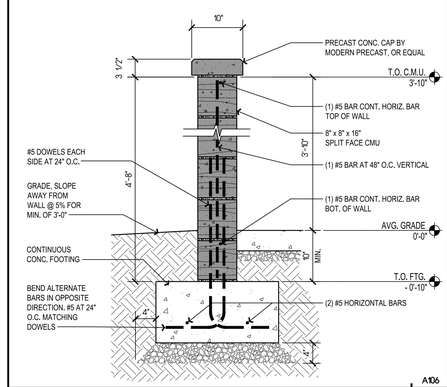

A106

BBQ AREA SCREEN WALL

SCALE: 1" = 1'-0"

3

Copyright © 2020

All ideas, designs, arrangements and plans indicated or represented by this drawing are owned by, and the property of, NICHOLS, MELBURG and ROSSETTO and were created, evolved and developed for use on, and in conjunction with, the specified project. None of such ideas, designs, arrangements and plans shall be used by or disclosed to any person, firm or corporation for any purpose whatsoever without the written permission of NICHOLS, MELBURG and ROSSETTO.

NICHOLS MELBURG & ROSSETTO
ARCHITECTS + ENGINEERS
555 MAIN STREET, SUITE 300
CHICO, CA. 95928
(530) 891-1710 (530) 891-0138 FAX
http://www.nmrdesign.com

CONSULTANTS

LICENSE STAMPS

LICENSED ARCHITECT
DAVID A. ROSSETTO
No. C26604
REN. 9-30-21
STATE OF CALIFORNIA

PROJECT NAME

Rava RANCHES INC.

BITTERWATER/ CHESTNUT WORKFORCE HOUSING

LYONS ST. & CHESTNUT AVE.
KING CITY, CA 93930

SHEET TITLE

SITE DETAILS

DRAWING STATUS

CONSTRUCTION DOCUMENTS

BUILDING DEPT REVIEW

REVISIONS

Sym.	Description	Date

Drawn By	KAJ
Date Issued	2019-12-20
Scale	AS NOTED
Project No.	18-1765

SHEET No.

A106

Login Name: Kurt
Plot Date: January 14, 2020 - 4:41 pm
File Name: S:\Work\18-1765 Rava Ranches Workforce Housing\0-0 Drawings & Models\0-01 CAD Files\18-1765_A105-106_SITEDETS.dwg
LAYER: A-TITL

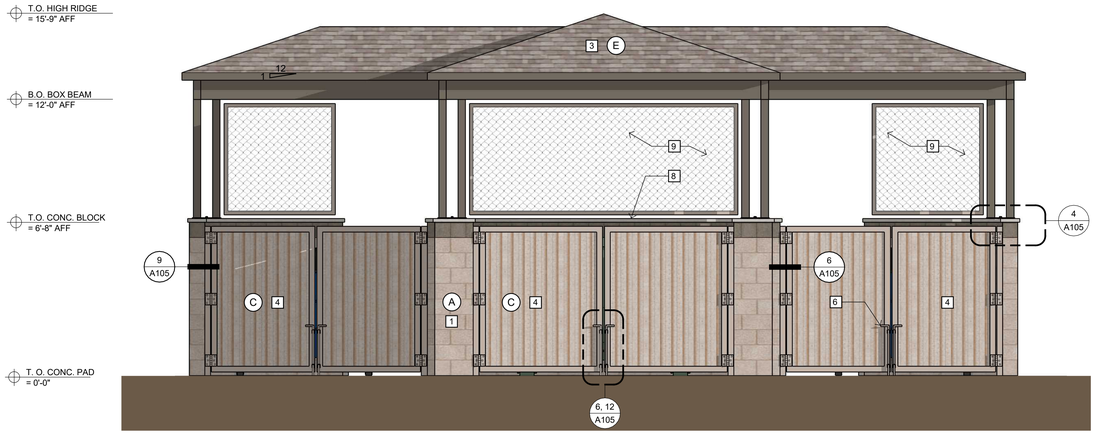

1 FRONT ELEVATION
SCALE: 3/8"=1'-0"

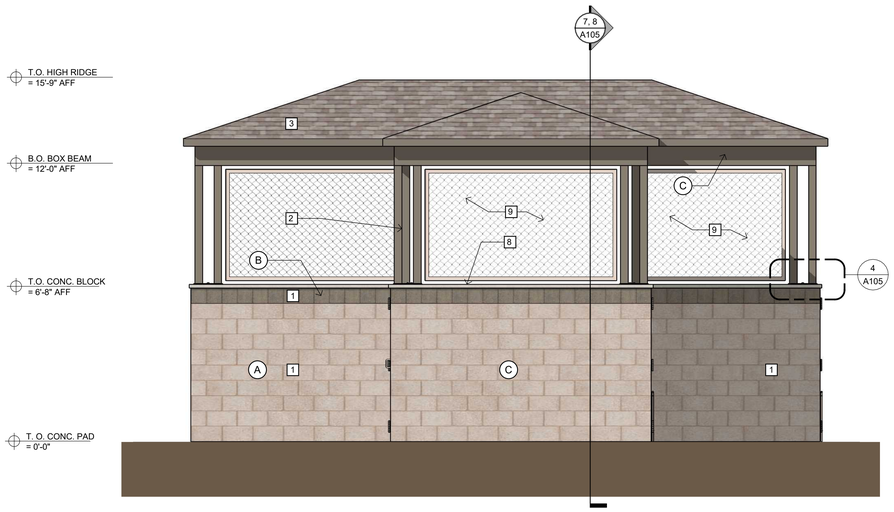

2 SIDE ELEVATION
SCALE: 3/8"=1'-0"

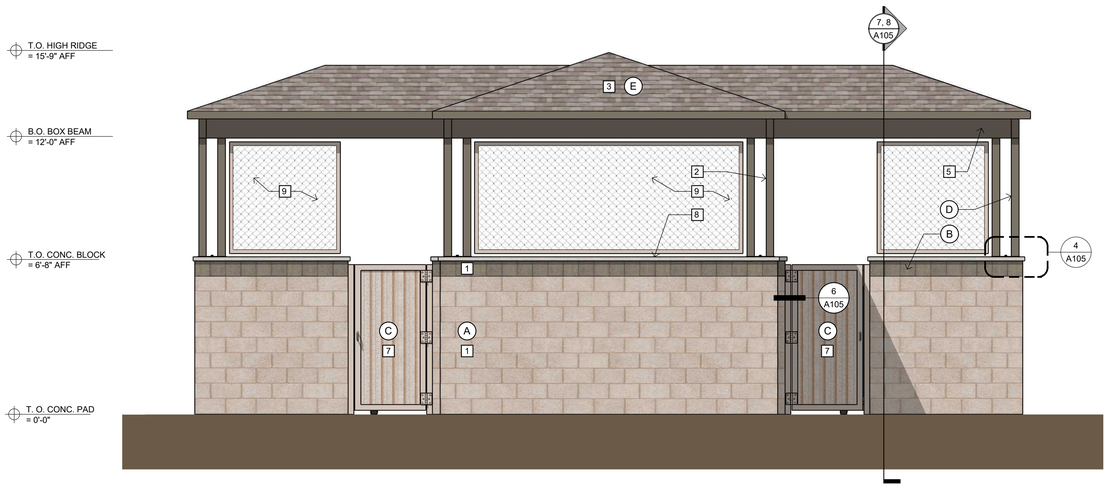

3 REAR ELEVATION
SCALE: 3/8"=1'-0"

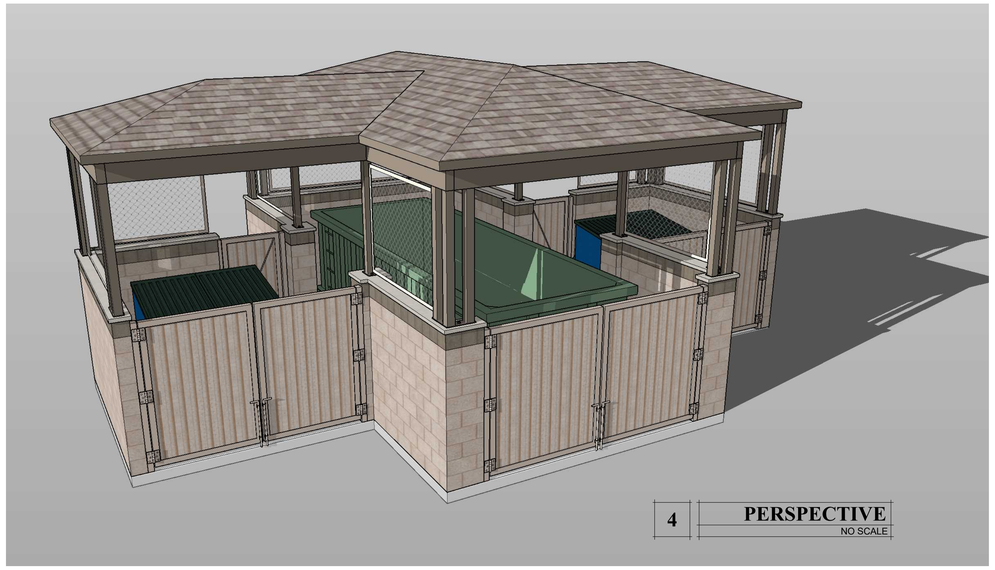

4 PERSPECTIVE
NO SCALE

KEY NOTES

1. SPLIT FACE BLOCK - COLOR AS INDICATED
2. STEEL POST - PAINT AS INDICATED
3. STANDING SEAM METAL ROOF ON WD. SHEATHING & GANGNAIL TRUSSES
4. SWINGING STEEL DECKING GATE - PAINT AS INDICATED
5. STEEL BEAM - PAINT AS INDICATED
6. CANE BOLTS AT GATES WITH LOCK HASP, SEE 6/A105
7. SWINGING STEEL DECKING DOOR WITH LATCHING HARDWARE
8. 2" THK. PRECAST CONCRETE COPING WITH 1" OVER HANG, GROUT JOINTS
9. WELDED SS WIRE MESH WITH 2" MAX. APERTURE IN 2" WIDE, U-SHAPED FRAME, ALL 4 SIDES, MOUNT ON TABS WELDED TO ROOF SUPPORT.

MATERIALS LEGEND

- A — SPLIT FACE BLOCK - COLOR 'A' BASALITE "NATURAL(P)"
- B — SPLIT FACE BLOCK - COLOR 'B' BASALITE "STANDARD S193(R)"
- C — LIGHT COLORED METAL - COLOR 'C' BENJAMIN MOORE 990 "HAMPSHIRE TAUPE"
- D — DARK COLORED METAL - COLOR 'D' BENJAMIN MOORE 980 "WOODCLIFF LAKE"
- E — ASPHALT SHINGLE ROOFING: OWENS CORNING "AMBER" TRU-DEFINITION COOL ROOF SHINGLES SRI = 21

GENERAL NOTES

1. ALL FLASHING AND ROOF TOP PENETRATIONS TO BE PAINTED TO MATCH ADJACENT ROOF, WALL OR TRIM COLOR AS APPLICABLE. NO UNPAINTED, GALVANIZED FLASHING OR VENTS TO BE VISIBLE.
2. SEE ELEC'L DWGS FOR LIGHTING
3. ELEV. 0'-0" IS FOR BUILDING REFERENCE ONLY, SEE CIVIL DRAWINGS FOR ACTUAL FLOOR ELEVATIONS.

Copyright © 2010

All ideas, designs, arrangements and plans indicated or represented by this drawing, are and shall remain the property of NICHOLS, MELBURG and ROSSETTO and were created, evolved and developed for use on, and in conjuction with, the specified project. None of such ideas, designs, arrangements or plans shall be used by, or disclosed to any person, firm or corporation for any purpose whatsoever without the written permission of NICHOLS, MELBURG and ROSSETTO.

NICHOLS MELBURG & ROSSETTO
ARCHITECTS + ENGINEERS
555 MAIN STREET, SUITE 300
CHICO, CA 95928
(530) 891-1710 (530) 891-0138 FAX
http://www.nmrdesign.com

CONSULTANTS

LICENSE STAMPS

LICENSED ARCHITECT
DAVID A. ROGERS
No. C26604
EXP. 9-30-
STATE OF CALIFORNIA

PROJECT NAME

Rava RANCHES INC.

BITTERWATER/ CHESTNUT WORKFORCE HOUSING

LYONS ST. & CHESTNUT AVE.
KING CITY, CA 93930

SHEET TITLE

EXTERIOR ELEVATIONS - TRASH ENCLOSURE

DRAWING STATUS

CONSTRUCTION DOCUMENTS

BUILDING DEPT REVIEW

REVISIONS

Sym.	Description	Date

Drawn By	KAJ
Date Issued	2019-12-20
Scale	3/8" = 1'-0"
Project No.	18-1765

SHEET No.

A303