KING CITY
CALIFORNIA

BUILDING DEPARTMENT
INFORMATIONAL HANDOUT #12 - 1

Water Heater - Corner Wall Anchorage Details

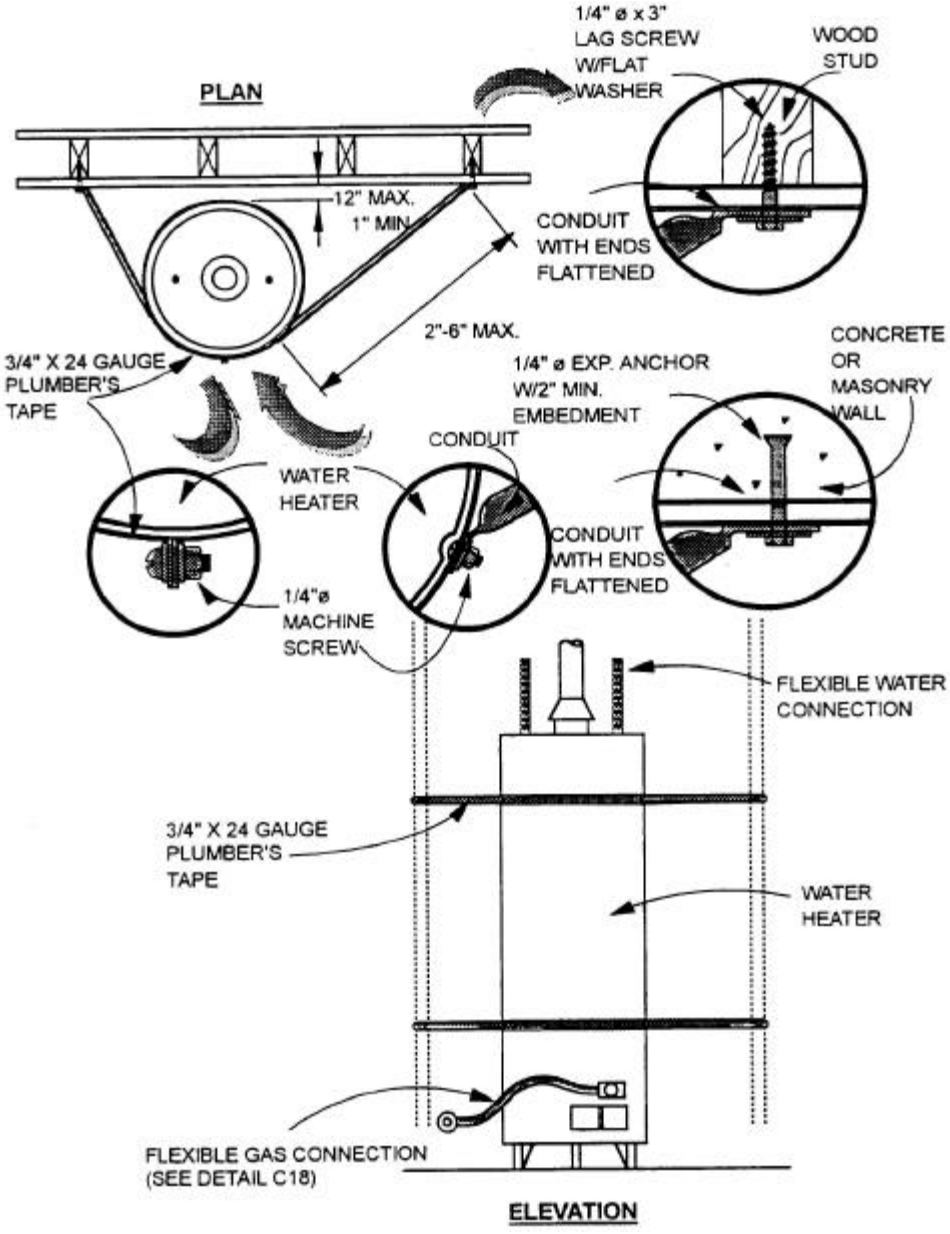

BUILDING DEPARTMENT
INFORMATIONAL HANDOUT #12 - 1
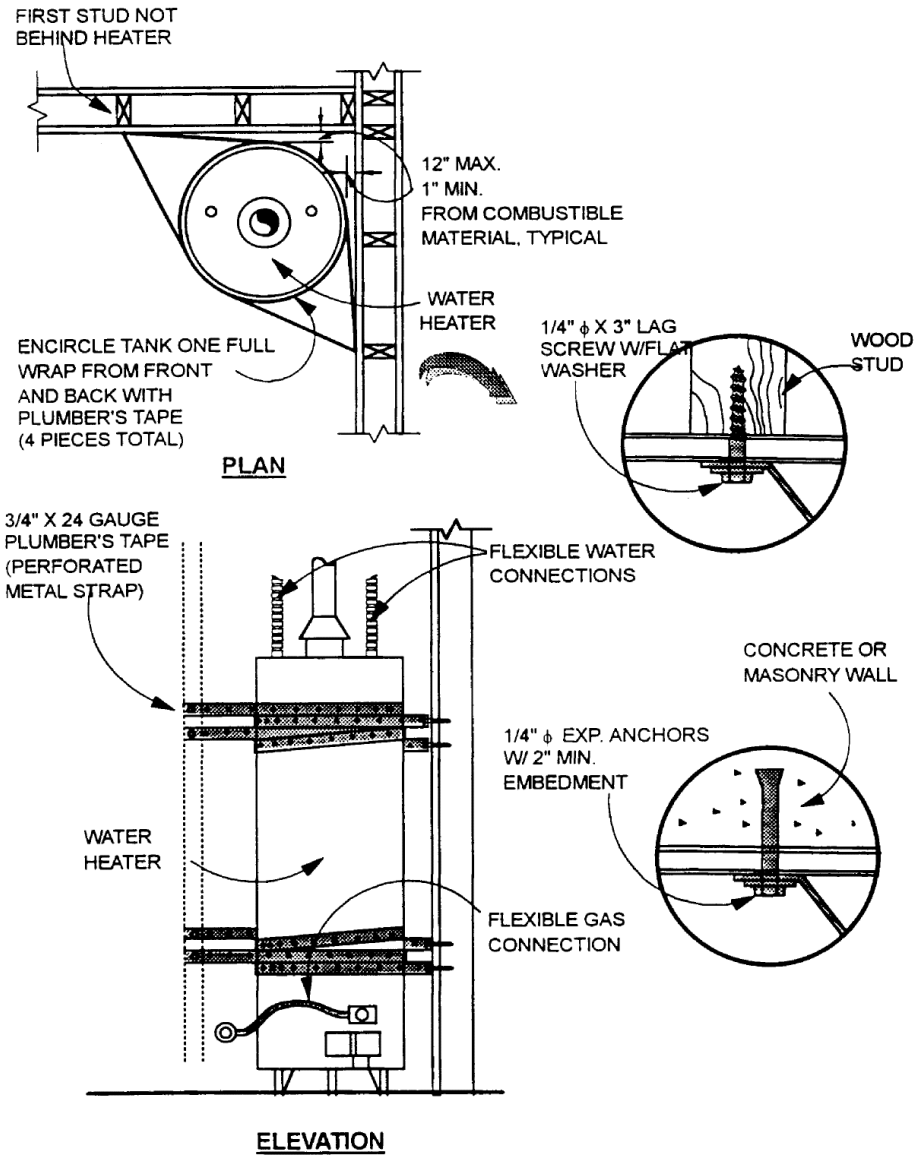
Water Heater - Corner Wall Anchorage Details